HEWLETT-PACKARD

Read This Book First!

Getting Started with Your HP Touchscreen II Personal Computer

Notice

The information contained in this document is subject to change without notice.

Hewlett-Packard makes no warranty of any kind with regard to this material, including, but not limited to, the implied warranties of merchantability and fitness for a particular purpose. Hewlett-Packard shall not be liable for errors contained herein or for incidental or consequential damages in connection with the furnishing, performance, or use of this material.

Hewlett-Packard assumes no responsibility for the use or reliability of its software on equipment that is not furnished by Hewlett-Packard.

MS-DOS is a U.S. registered trademark of Microsoft, Incorporated.

WordStar is a U.S. registered trademark of MicroPro International Corporation.

LOTUS 1-2-3 is a U.S. registered trademark of Lotus Development Corporation.

Personal Office Computer Division
974 E. Arques Avenue
P. O. Box 486
Sunnyvale, CA 94086, U.S.A.

Printing History

First Edition—September 1986 Printed in Singapore

Federal Communications Commission Radio Frequency Interference Statement

This equipment has been certified to comply with the limits for a Class B computing device, pursuant to Subpart J of Part 15 of FCC Rules. Only peripherals (computer input/output devices, terminals, printers, etc.) certified to comply with the Class B limits may be attached to this computer. Operation with non-certifed peripherals is likely to result in interference to radio and TV reception.

Getting Started With Your HP Touchscreen II Personal Computer

HEWLETT PACKARD

Manual Part No.
45847-90044

Table of Contents

Introduction

Welcome
About This Manual
Other Books About the Touchscreen II
Communicating with Your Touchscreen II: Input Devices
The Disc that Comes with Your System
Where to Go for More Help

Chapter 1 — **Setting Up Your HP Touchscreen II**

1-1 Preparing the Display Unit
1-4 Before You Get Started
1-11 Connecting the Keyboard

Chapter 2 — **Starting Up Your Touchscreen II**

2-2 The Power-On Self-Test
2-5 Installing Accessories
2-5 Finishing Up

Chapter 3 — **Getting Ready to Connect Your Disc Drive**

3-1 If You Have Either the HP 9123D or the HP 9133H Disc Drive
3-3 If You Have a Different HP Disc Drive

Chapter 4

Connecting the HP 9123D Flexible Disc Drive

4-1 Preparing the HP 9123D Disc Drive
4-3 Connecting the Disc Drive to the Display Unit
4-10 Connecting Your Printer or Plotter
4-11 Loading the Operating System
4-17 Using MAKE WORKDISC
4-20 Configuring Your Disc Drive and Other Devices
4-21 Final Steps

Chapter 5

Connecting the HP 9133H Fixed Disc Drive

5-1 Preparing the HP 9133H Disc Drive
5-6 Connecting the Disc Drive to the Display Unit
5-11 Connecting Your Printer or Plotter
5-12 Loading the Operating System
5-19 Using MAKE WORKDISC
5-22 Changing the Address of Your Fixed Disc Drive
5-23 Configuring the Fixed Disc Drive and Other Devices
5-24 Renaming Your Disc Drive
5-25 Installing Applications onto Your Fixed Disc
5-26 Final Steps

Appendix A

Connecting HP Printers and Plotters

A-2 What You Need to Install Printers and Plotters
A-3 Cable Connections to Your Touchscreen II
A-5 Connecting Your HP 2225A ThinkJet Printer
A-10 Connecting Your HP 2225D ThinkJet Printer
A-13 Connecting Your HP 2227A QuietJet Plus Printer
A-17 Connecting Your HP 2603A Daisywheel Printer
A-20 Connecting Your HP 2686A LaserJet Printer
A-23 Connecting Your HP 2686 LaserJet Plus Printers
A-26 Connecting Your HP 7440A ColorPro Graphics Plotter
A-33 Connecting Your HP 7475A Graphics Plotter
A-40 Finishing Up
A-40 Where to Go from Here

Appendix B

Configuring Your HP Touchscreen II

B-1 Using EASY CONFIG
B-3 Loading EASY CONFIG
B-5 Configuring Disc Drives with EASY CONFIG
B-6 Configuring Your Primary Printer with EASY CONFIG
B-8 Configuring the Rest of Your Devices with EASY CONFIG
B-8 Exiting EASY CONFIG
B-8 Additional Configuring
B-9 Printing From the Keyboard
B-13 Configuring Port 2
B-21 Finishing Configuration

Appendix C

Providing a Good Environment for Your HP Touchscreen II Personal Computer

C-1 Give the Touchscreen II a Clean Environment
C-1 Keep Your Touchscreen II Away from Fire Hazards
C-2 Provide Moderate Temperature and Humidity
C-4 Provide Safe Electrical Connections
C-5 Protect the Touchscreen II from Lightning
C-6 Avoid Interfering with Radio and Television Reception
C-6 Comply with Local Regulations for Computers

Appendix D

Installing Accessory Boards in the HP Touchscreen II Personal Computer

D-1 Installation Instructions

Appendix E

Using UPDATE SYSTEM and UPDATE APPS

E-1 Before You Begin
E-2 Using INSTALL to Remove Applications
E-4 Using UPDATE SYSTEM
E-6 Using UPDATE APPS
E-8 Finishing Up

List of Figures

Page	Description	Figure
1-1	Your Touchscreen II Equipment	1-1
1-2	Removable Cable Covers—Top and Back	1-2
1-3	Tilt-Screen and Brightness Control	1-3
1-5	Display Unit Power Switch	1-4
1-6	Top Cable Cover Removal	1-5
1-7	Screen Adjustment Panel	1-6
1-8	Back Cable Cover Removal	1-7
1-9	Display Unit Switch and Cable Panels	1-8
1-10	Display Unit Voltage Setting for U.S.	1-9
1-11	Keyboard Cable	1-10
1-12	Keyboard Cable Connectors	1-11
1-13	Cable to Keyboard Plug-in	1-12
1-14	Securing the Keyboard Cable	1-13
1-15	Keyboard Cable to Display Unit Plug-In	1-14
2-2	Multiple-Outlet Strip	2-1
2-6	Replacing the Display Unit Cable Covers	2-2
3-1	The HP 9123D Disc Drive	3-1
3-2	The HP 9133H Disc Drive	3-2
4-1	Your HP 9123D Disc Drive	4-1
4-2	HP 9123D with A and B Drives Identified	4-2
4-3	Stacking the Display Unit and Disc Drive	4-3
4-4	Display Unit Cable Cover Removal	4-4
4-5	Disc Drive Cable Cover Removal	4-5
4-6	The HP 9123D HP-IB Cable	4-6
4-7	The HP 9123D Power Cord	4-7
4-8	Display Unit and HP 9123D Connected	4-8
4-12	Inserting the System Master Disc	4-9
4-13	The Personal Applications Manager Screen	4-10
4-14	Keys for Hard Reset	4-11

Page	Description	Figure
4-15	P.A.M. Main Menu with MS-DOS Selected	4-12
5-1	HP 9133H Disc Drive	5-1
5-2	HP 9133H Rear Panel	5-2
5-3	HP 9133H Address Wheel	5-3
5-4	HP 9133H Configuration Switch	5-4
5-5	HP 9133H Voltage Switch Set for U.S.	5-5
5-6	Stacking the Display Unit and Disc Drive	5-6
5-7	The HP-IB Cable	5-7
5-8	The Power Cord	5-8
5-9	Display Unit and HP 9133H Connected	5-9
5-13	The HP 9133H with A and B Drives Identified	5-10
5-14	Inserting a Flexible Disc in the HP 9133H	5-11
5-15	P.A.M. Main Menu	5-12
5-17	Keys for Hard Reset	5-13
5-22	The HP 9133H Address Wheel Set at 0	5-15
5-24	The HP 9133H with Disc Drives Identified	5-16
A-3	HP-IB and R-232-C Cable Ends	A-1
A-5	HP 2225A Switch Settings	A-2
A-6	HP 2225A Cabled with HP-IB	A-3
A-7	Back of Touchscreen II with HP-IB Cabling	A-4
A-8	Piggybacking HP-IB Cables	A-5
A-10	HP 2225D Switch Settings	A-6
A-11	HP 2225D Cabled to the Touchscreen II	A-7
A-13	HP 2227A Switch Settings	A-8
A-14	HP 2227A Cabled with RS-232-C Cable	A-9
A-17	HP 2603A Switch Settings	A-10
A-18	HP 2603A Cabled to Touchscreen II	A-11
A-20	HP 2686A Cabled to Touchscreen II	A-12
A-23	HP 2686 LaserJet Plus Interface Connector	A-13
A-24	HP LaserJet Plus Cabled to the Touchscreen II	A-14
A-26	HP 7440A Switch Settings for HP-IB Cable	A-15
A-27	HP 7440A Switch Settings for RS-232-C Cable	A-16
A-28	Back of Touchscreen II with HP-IB Cabling	A-17
A-29	Piggybacking HP-IB Cables	A-18
A-30	Back of Touchscreen II with RS-232-C Cabling	A-19

Page	Description	Figure
A-33	HP 7475A Switch Settings for HP-B Cable	A-20
A-34	HP 7475A Switch Settings for RS-232-C Cable	A-21
A-35	HP 7475A Cabled with HP-IB	A-22
A-36	Back of Touchscreen II with HP-IB Cabling	A-23
A-37	Piggybacking HP-IB Cables	A-24
A-38	HP 7475A Attached to the Touchscreen II via RS-232-C Cable	A-25
B-3	Choosing EASY CONFIG on the P.A.M. Main Menu	B-1
B-4	The EASY CONFIG Main Menu	B-2
B-5	Choosing Disc Drives on the EASY CONFIG Main Menu	B-3
B-9	The P.A.M. Main Menu	B-4
B-11	HP-IB Cable	B-5
B-12	RS-232-C Cable	B-6
B-13	P.A.M. Main Menu	B-7
B-14	The Port 2 Configuration Menu	B-8
B-17	Port 2 Configuration for the HP 2225D and HP 2227A	B-9
B-17	Port 2 Configuration for the HP 2686A and HP 2686 Plus	B-10
B-18	Port 2 Configuration for the HP 7470A and 7475A	B-11
B-18	Port 2 Configuration for the HP 2601A and HP 2602A	B-12
B-19	Port 2 Configuration for the HP 2603A	B-13
B-19	Port 2 Configuration for the HP 2930 Series	B-14
B-20	Port 2 Configuration for the HP 7440A and HP 7550A	B-15
C-2	Recommended Temperature/Humidity Range	C-1
C-4	Multiple-Outlet Strip	C-2
D-2	Installing an Accessory Card	D-1

Introduction

Welcome
About This Manual
Other Books About the Touchscreen II
Communicating with Your Touchscreen II: Input Devices
The Disc that Comes with Your System
Where to Go for More Help

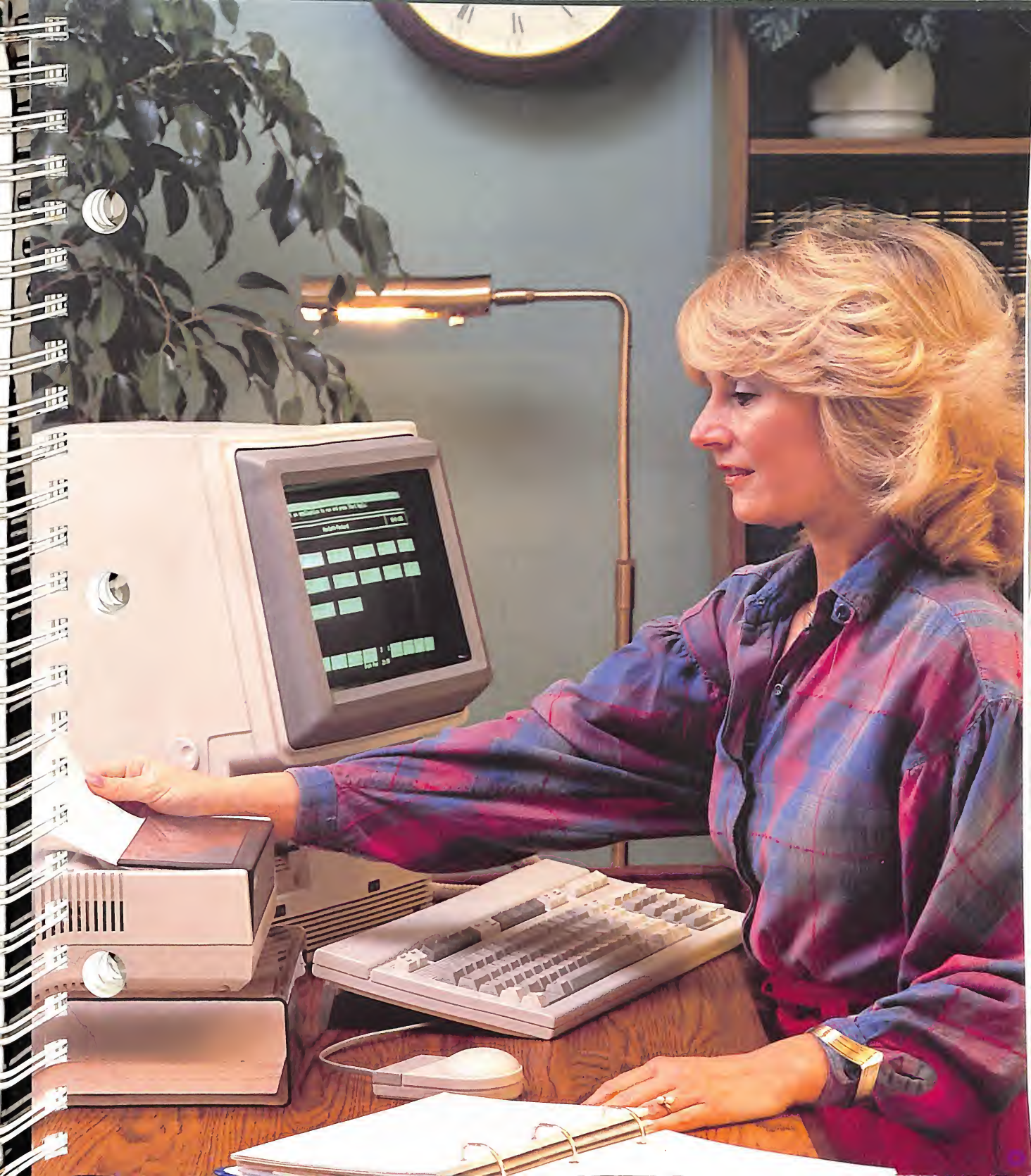

Introduction

Welcome

Congratulations! You have purchased the HP 150 II, commonly referred to as the HP Touchscreen II Personal Computer. (When combined with a large-capacity disc drive, the system is called the Touchscreen Max II.)

The HP Touchscreen II is special in lots of ways. It has a feature called P.A.M. (for Personal Applications Manager) that helps you to organize your applications. This means that you don't have to learn or remember a lot of computer instructions (or even how to type) to work faster and get more done.

It also has an accessory called HP Touch that lets you work with the computer by just pointing your finger at the screen.

The HP Touchscreen II Personal Computer is a powerful and versatile tool; the more you know about its capabilities, the more it will do for you. You use it with disc drives as a personal computer. You can also use it as a computer terminal, and connect it to a larger system. You can use it with a variety of fixed or flexible disc drives (the HP 9123D and HP 9133H disc drives are covered in this booklet). You can use it with printers and plotters. You can also add accessory cards, for example, to increase the size of the computer's memory, to add a different type of printer, or to perform special functions.

About This Manual

This manual is a complete guide to setting up your new HP Touchscreen II. It takes you through all the steps for connecting and testing the parts of your system. It includes information and instructions on the following procedures.

- Preparing your display unit and connecting the keyboard.
- Starting up the Touchscreen II and installing accessories
- Connecting a flexible disc drive and/or a fixed disc drive to your display unit.
- Connecting a printer or plotter to your Touchscreen II.
- Configuring your disc drive(s) and installing applications.

Other Books About the Touchscreen II

Using Your HP Touchscreen II Personal Computer. This manual is your general reference guide to the HP Touchscreen PC. It describes your computer and how it works. It explains the procedures that you'll need to start up your system each day, to work with files, discs, and applications, and to take care of your computer.

These other publications come with your Touchscreen II:

Using Your HP Touchscreen II Personal Computer as a Terminal. This manual explains how to make your Touchscreen II function as a terminal with another computer.

HP Touch Installation Guide. You will receive this booklet if you order the HP Touch accessory.

If you are an advanced or technically inclined Touchscreen II user, you will find a list of technical resources in the Introduction of the manual *Using Your Touchscreen II PC.*

Communicating with Your Touchscreen II: Input Devices

Two input devices are commonly used with the Touchscreen II: the keyboard that comes with all Touchscreen II PCs, and HP Touch, a Touchscreen II accessory which allows you to make choices by touching your screen.

How you communicate with your computer depends upon which input device you have. For example, the function keys (f1 through f8) have corresponding labels on the screen. To activate a function, you can press the function key on the keyboard, or, if you have the HP Touch accessory, you can touch the label on the screen.

To make a selection from a menu, you can move the cursor using the Tab key (to move forward), the Shift Tab keys (to move backward) or the cursor control (◄ ► ▲ ▼) keys. Or, if you have the HP Touch accessory, you can touch the appropriate place on the screen.

Whenever the word "press" is used alone, it means the key on the keyboard has no corresponding screen label and you must press the key even if you have the HP Touch accessory. For example, when you want to indicate a carriage return, you press the Return key on the keyboard even if you have HP Touch.

Most applications written for the Touchscreen II are designed to take advantage of the Touch feature. Therefore, the manuals that accompany these applications assume that you have the HP Touch Accessory. For more information on how to use the two input devices, see the chapter entitled Introducing the HP Touchscreen II in *Using Your HP Touchscreen II Personal Computer.*

The Disc that Comes with Your System

Your new HP Touchscreen II comes with one double-sided disc, formatted double-sided.

The System Master Disc has operating system software and these applications:

- MSDOS COMMANDS
- FORMAT
- DEVICE CONFIG
- EASY CONFIG
- COPY/BACKUP
- INSTALL
- SETUP P.A.M.
- SAVERAM
- STORE CONFIG
- MAKE WORKDISC
- UPDATE SYSTEM
- UPDATE APPLICATIONS

Where to Go for More Help

If you have any problems setting up your Touchscreen II or its software, call the person from whom you bought your Touchscreen II. You can also refer to the section entitled "Answers to Your Questions" in the Current Information section of the *HP PC Communicator* magazine. A recent copy is included with your Touchscreen II.

Corrections and update information for this manual and the Touchscreen II are provided through the *HP PC Communicator.* To stay up-to-date you can order a subscription (HP Product number 45530).

Chapter 1

Setting Up Your HP Touchscreen II

1-1 Preparing the Display Unit

1-4 Before You Get Started

1-11 Connecting the Keyboard

1 Setting Up Your HP Touchscreen II Personal Computer

Preparing the Display Unit

Your HP Touchscreen II Personal Computer system includes a display unit, a keyboard, a coiled keyboard cable, a disc drive and HP-IB cable, and an AC power cord. You may also have a printer or plotter.

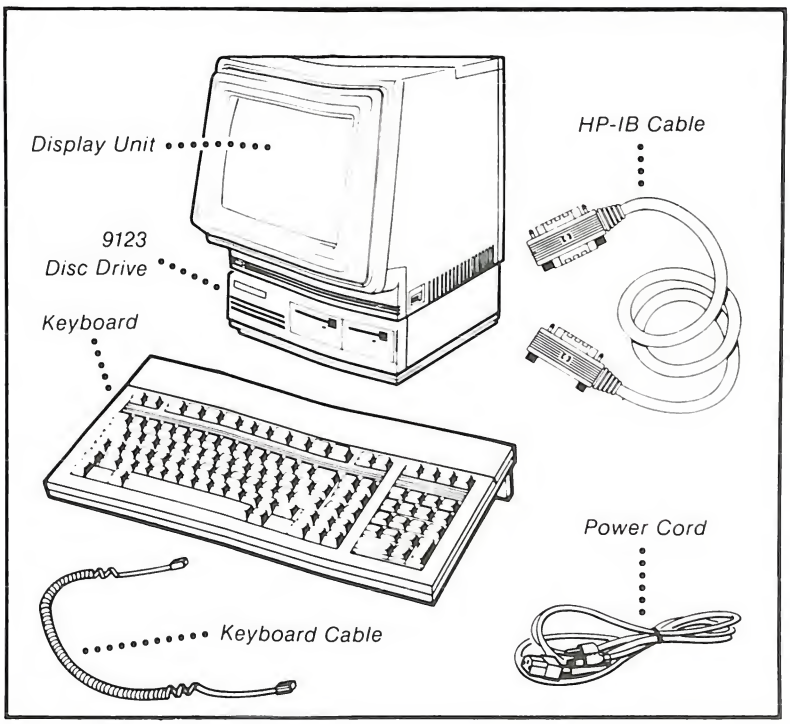

Figure 1-1. Your HP Touchscreen II Equipment

The voltage switch, fuse, and cable connectors for the display unit are protected by removable panels, top and rear, called cable covers.

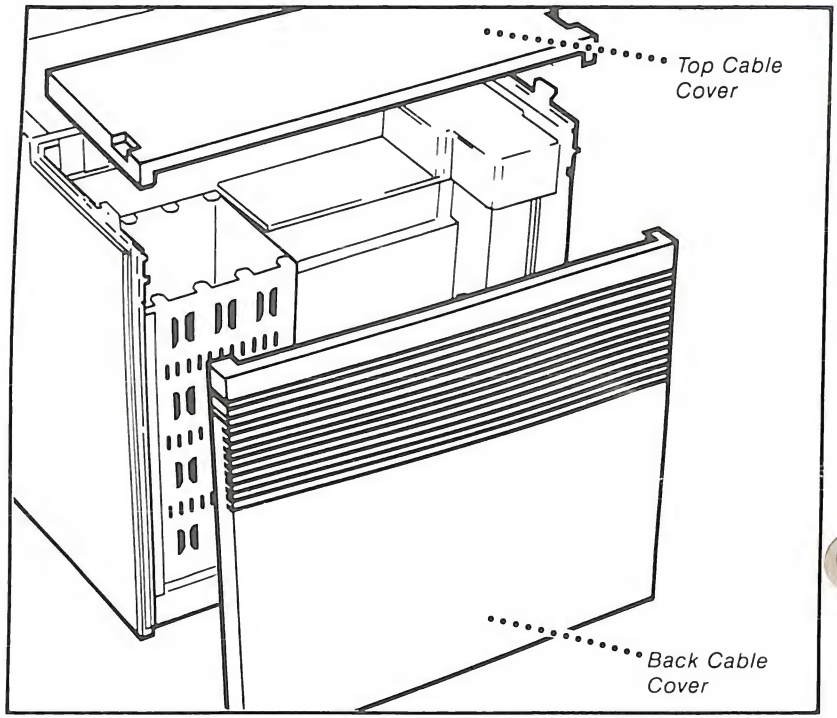

Figure 1-2. Removable Cable Covers—Top and Back

Your display unit features a tilting screen so that you can easily adjust and readjust the screen position for comfortable viewing. The brightness control knob is located on the left side as you face the screen.

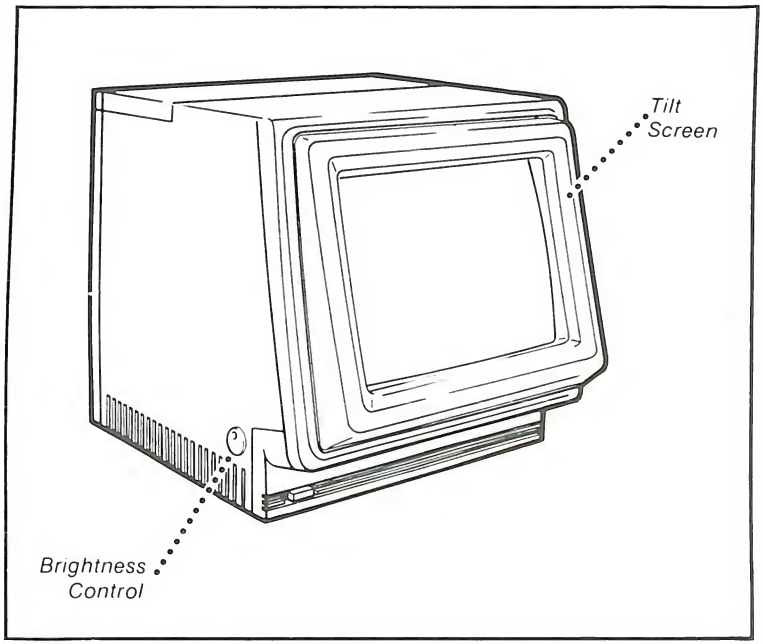

Figure 1-3. Tilt-Screen and Brightness Control

Before You Get Started

If you provide a good environment for your Touchscreen II, it will last longer, operate more reliably, and need fewer repairs. Before you begin setting up your computer, look over this environmental checklist:

- Give the computer a clean environment
- Avoid placing the unit in direct sunlight
- Keep your Touchscreen II away from fire hazards
- Provide moderate temperature and humidity
- Protect the Touchscreen II from exposure to lightning
- Avoid interfering with radio and television reception
- Comply with local regulations for computers
- Provide appropriate electrical connections

If you need more information on any of these points, refer to Appendix C, Providing a Good Environment for Your HP Touchscreen II.

On the back inside cover of this booklet is a diagram showing the basic flow of the tasks you will go through to set up your HP Touchscreen II. We also provide you with a chart labeled Your HP Touchscreen II's Vital Statistics.

Use the diagram to guide you through the "Getting Started" activities. The diagram is a flowchart displaying the main tasks necessary to ready your Touchscreen II for productive use. The chapter in which the task is explained is also included. The dotted rectangles are optional activities. Your needs will dictate which of these optional tasks you'll have to do.

The chart is designed to help you keep track of the various peripherals and cables you'll be using when you set up your new Touchscreen II. Fill in the appropriate boxes with the necessary information. You will probably have to refer back to this chart when you start to carry out the operations described in Appendixes A and B.

Follow these steps carefully to prepare your Touchscreen II for trouble-free use, and avoid any possible damage to your system.

1. Be sure the POWER is OFF. The power button is on the lower left front of the display unit (under the tilting screen). Power is turned on and off by pushing the button in and out. When the button is released to the out position, the POWER is OFF.

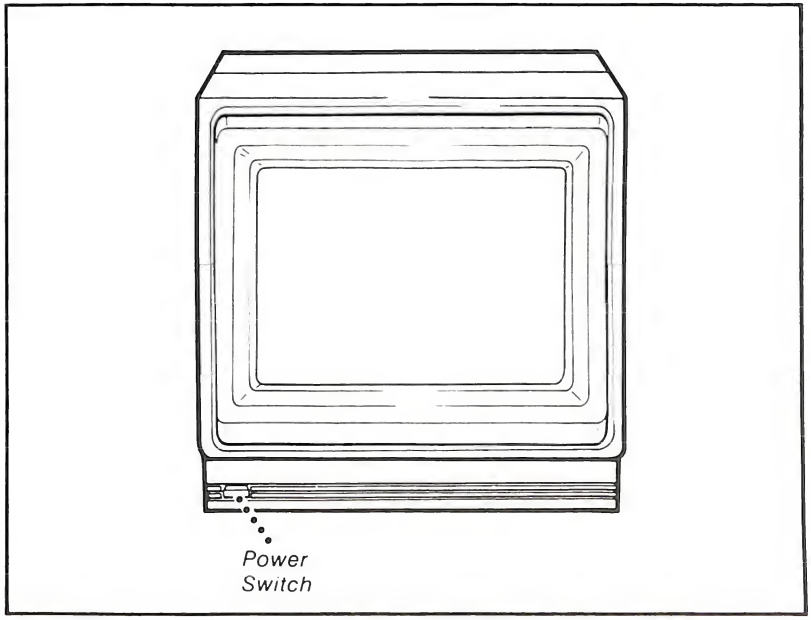

Figure 1-4. Display Unit Power Switch

2. Turn the display unit so that the back is facing you and remove the top and back cable covers.

   a. Remove the top cable cover by pressing in on the right and left release tabs and lifting the cover off.

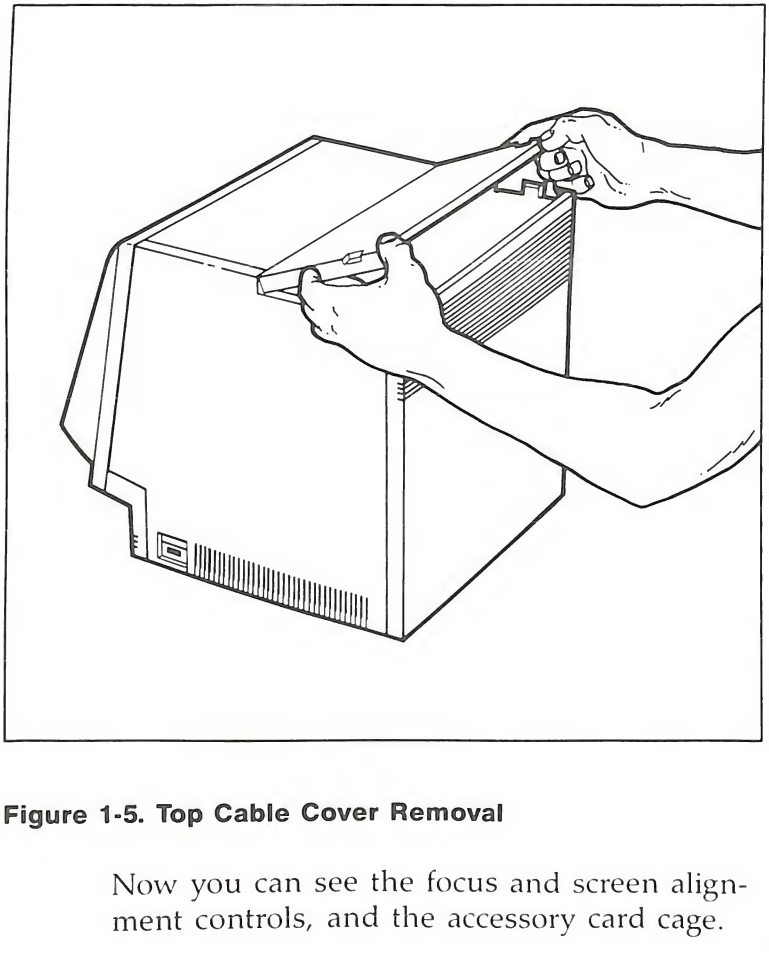

Figure 1-5. Top Cable Cover Removal

Now you can see the focus and screen alignment controls, and the accessory card cage.

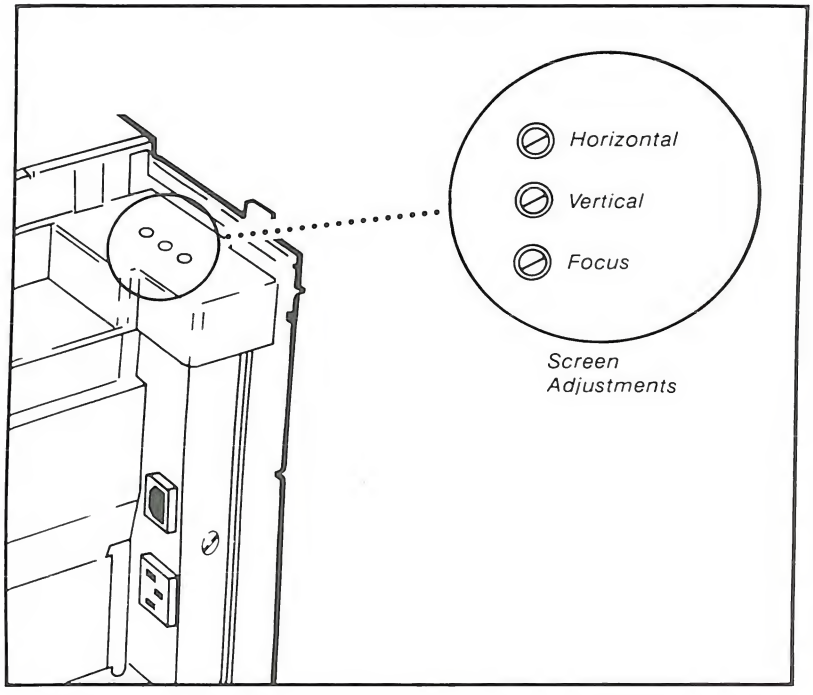

Figure 1-6. Screen Adjustment Panel

b. Remove the back cable cover by pressing in on the the right and left release tabs at the top of the cover, pulling it toward you, and lifting it off.

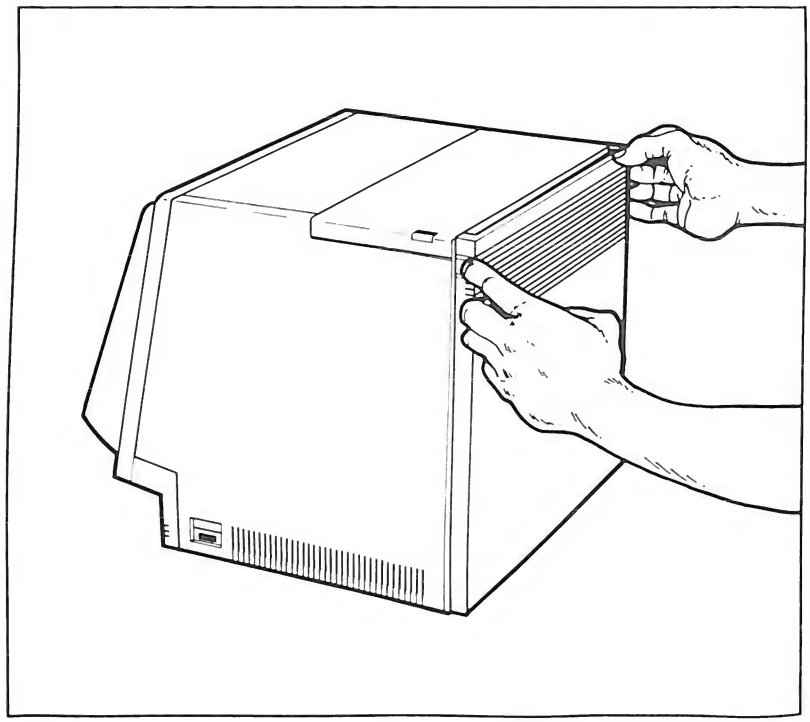

Figure 1-7. Back Cable Cover Removal

You now have complete access to the switch and cable panels at the back of your Touchscreen II display unit.

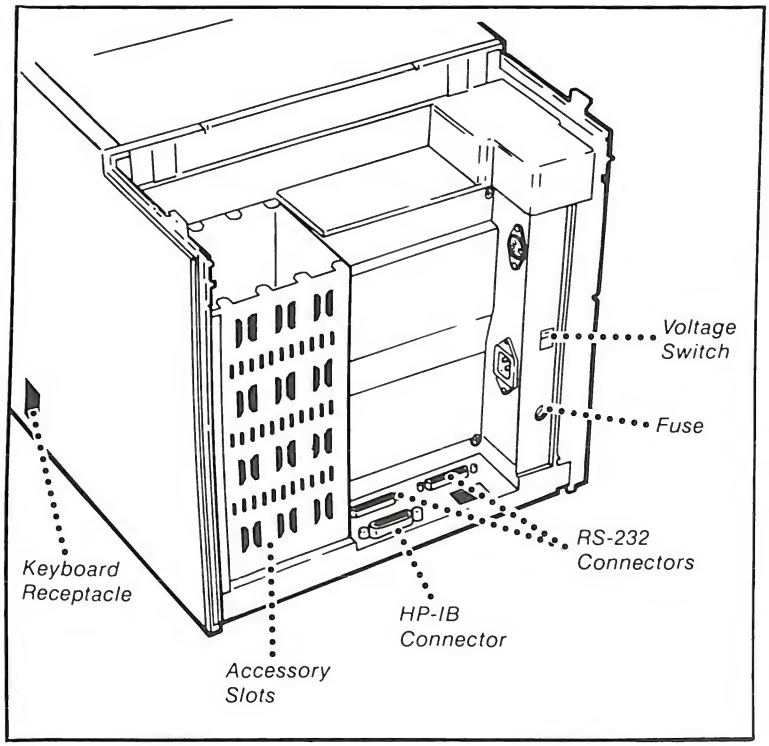

Figure 1-8. Display Unit Switch and Cable Panels

3. Check the voltage switch to make sure it is properly set for the voltage in your area. For example, the voltage in the U.S. is 115 VAC as shown in the picture below. (To change the voltage setting to 115 VAC, use a ballpoint pen to push the switch to the top. For 230 VAC, push the switch to the bottom.) Your HP Touchscreen II will not work if the voltage setting is incorrect.

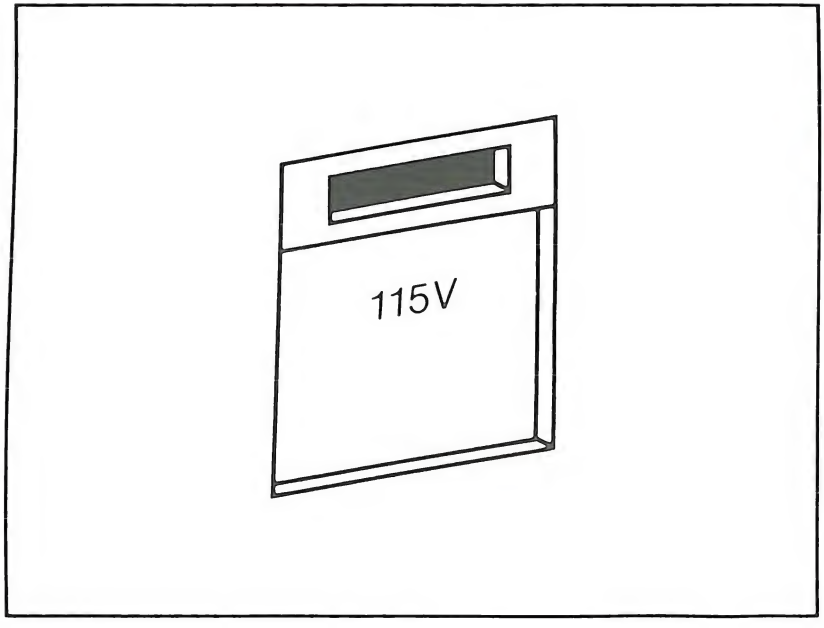

Figure 1-9. Display Unit Voltage Setting for U.S.

Connecting the Keyboard

Now you are ready to connect the keyboard to the display unit using the keyboard cable. The keyboard cable is coiled in the middle, with a straight section and cable connector at either end.

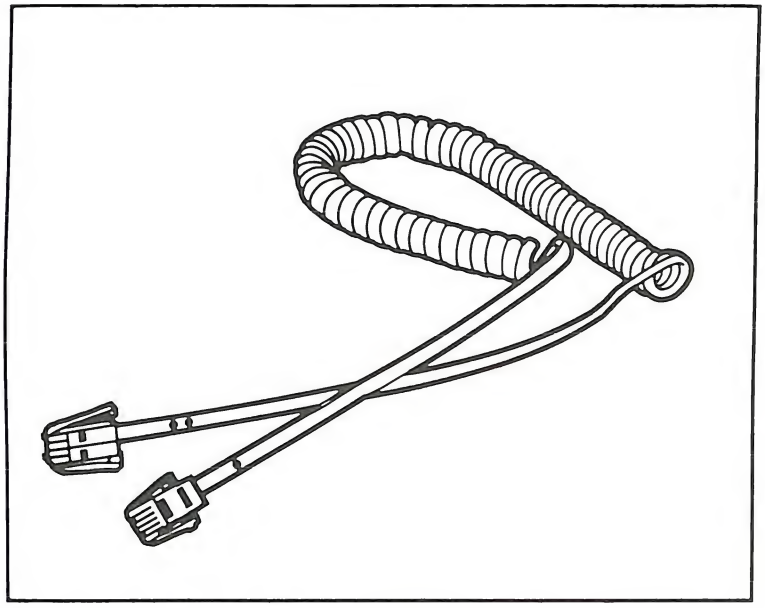

Figure 1-10. Keyboard Cable

Notice the single or double dot marking on each end section of the cable below the connectors. These marks identify the connector that plugs into the keyboard (one dot), and the one that plugs into the display unit (two dots).

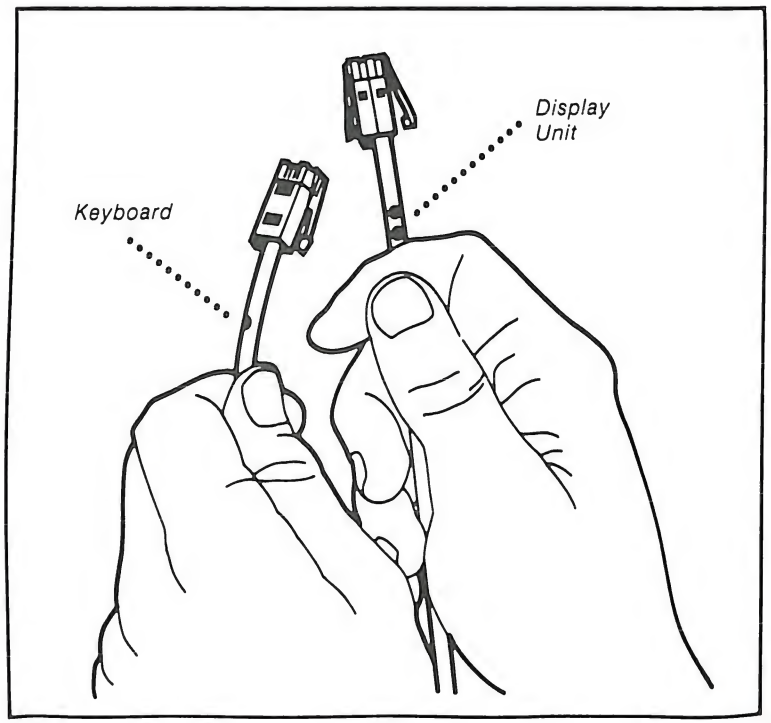

Figure 1-11. Keyboard Cable Connectors

To connect the keyboard to your Touchscreen II:

1. Turn the keyboard around so that the back is facing you, and locate the two receptacles in the center well of the back panel. The one on the left is the system receptacle, and is identified by two raised dots. The keyboard receptacle, on the right, is marked by one raised dot.

2. Plug the one-dot connector on the cable into the one-dot receptacle in the rear of the keyboard.

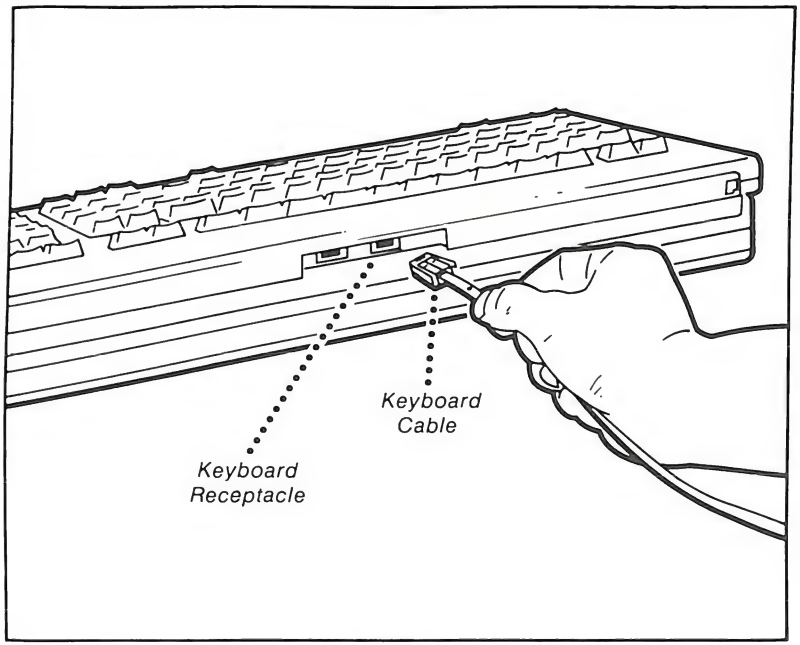

Figure 1-12. Cable to Keyboard Plug-In

3. Slide the flat section of plugged-in cable under the the cable retainer and guide it to the left. Hook it into the notch provided at the left end of the cable retainer. The single dot on the cable should be visible in the rear center well.

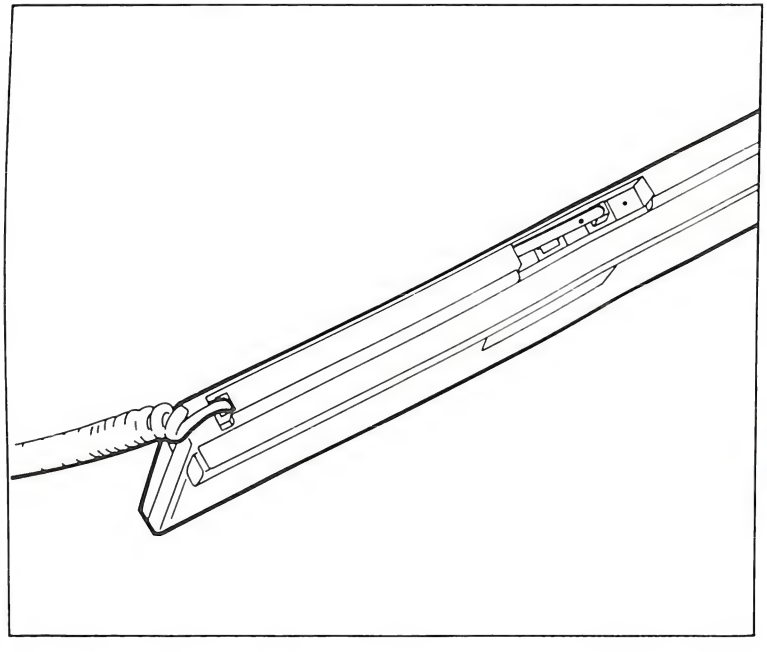

Figure 1-13. Securing the Keyboard Cable

4. Turn the keyboard around to face you; plug the two-dot end of the cable into the keyboard cable receptacle on the right front side of your display unit. Note that it is marked with two raised dots.

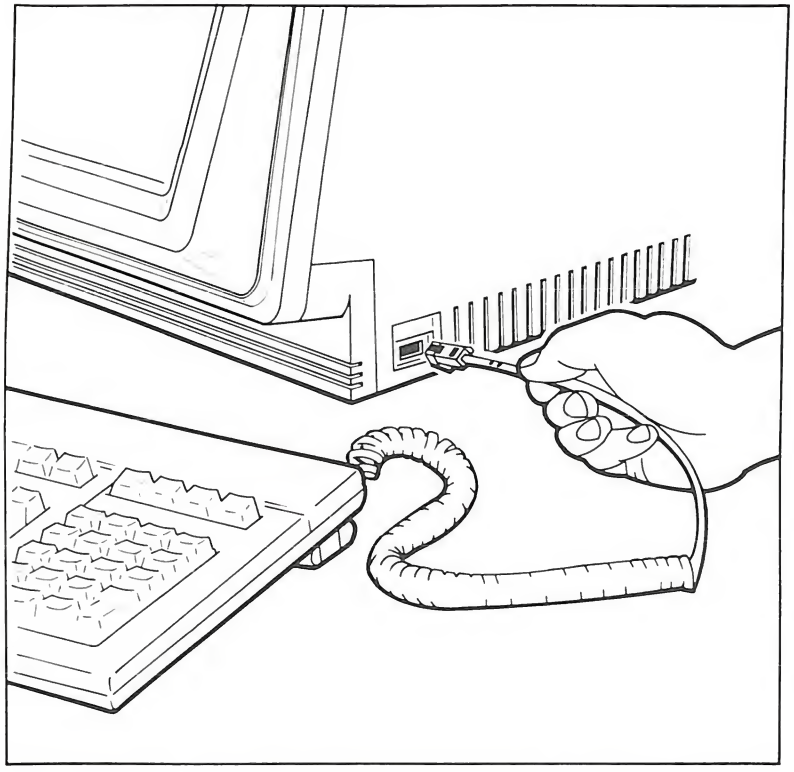

Figure 1-14. Keyboard Cable to Display Unit Plug-in

5. (Optional) Flip out the built-in keyboard stand. The gray panel underneath the keyboard is the built-in keyboard stand. It flips out to tilt your keyboard for more comfortable typing.

Note Be sure that you turn OFF power to your HP Touchscreen II before you connect any other devices to your computer.

Chapter 2 Starting Up Your Touchscreen II

2-2 The Power-On Self-Test
2-5 Installing Accessories
2-5 Finishing Up

2 Starting Up Your HP Touchscreen II

1. Check the POWER switch to make sure it is in the OFF position (flush with the front of the unit, and not pushed in).
2. Plug the POWER CORD into the AC INPUT socket on the back of the display unit.
3. Then plug the other end of the power cord into an electrical outlet (a wall socket), or into a grounded, multiple-outlet strip with its own circuit breaker. Do not use extension cords under any circumstances.

Warning

DO NOT USE EXTENSION CORDS UNDER ANY CIRCUMSTANCES! Extension cords can cause data errors and may also be a fire hazard. The power cord for your computer must be plugged into a grounded three-pronged outlet with a controlling circuit breaker. You may use a multiple-outlet strip (as illustrated in Figure 2-1) if it meets these requirements.

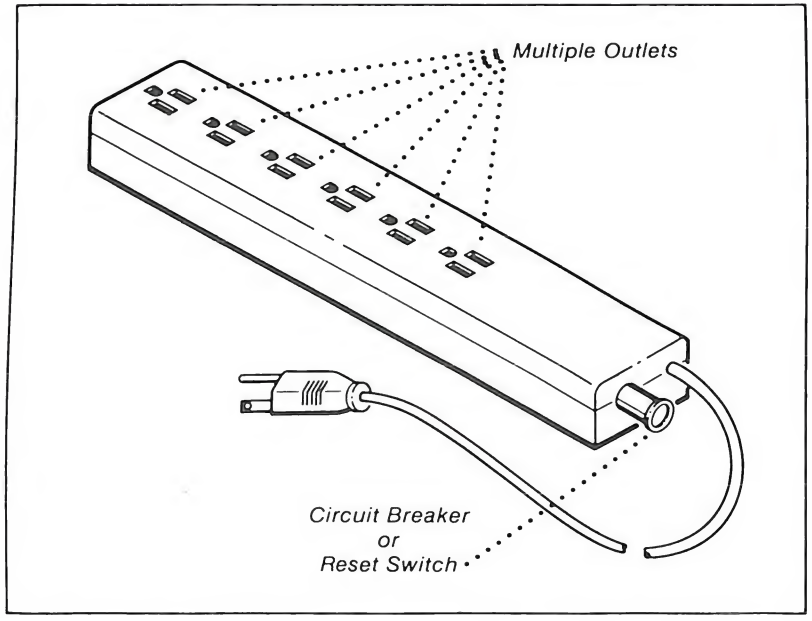

Figure 2-1. Multiple-Outlet Strip

The Power-On Self-Test

When you start up your HP Touchscreen II it tests itself to make certain it is working properly.

4. Push the POWER switch on the front of the unit to the ON position. (Push the button in; when the button is in, the power is ON.)

   When you turn the system on, you will hear the quiet, internal fan start up. The computer automatically carries out a Power-On Self-Test to make sure the system is operating correctly. The

test takes about 30 seconds. If the test is successful, the system beeps and the following message appears at the bottom of the screen:

```
Load Op Sys failed, Op Sys device not
found Press RETURN to Clear.
```

This message means that the computer was trying to find certain information on a disc. Since you have not yet connected your disc drive, it could not get this information. Each time you turn on your Touchscreen II, the computer carries out this Power-On Self-Test.

If Something Went Wrong

If the Power-On Self-Test fails, the following error message appears at the bottom of your screen:

```
Power on Test failed (and a code number)
```

In this case, write down the code number and call the person from whom you bought your Touchscreen II (who will be able to interpret the code). You can also refer to the section entitled "Answers to Your Questions" in the Current Information section of the *HP PC Communicator*. A recent copy is included with your Touchscreen II.

If nothing happens when you turn the system on, wait 60 seconds. If there is still nothing on the screen, check the following points:

- Is the POWER switch (located at the bottom left front of display unit) in the ON position?
- Is the power cord properly attached to the display unit and plugged into an electrical outlet?
- Is the electrical outlet functioning? (Check this by plugging a lamp or other electrical appliance into the same outlet.)
- Can you hear the internal fan running?
- Is the voltage setting correct?
- Is the BRIGHT knob on the side of the display unit turned so low that the screen is completely dark? (The BRIGHT knob is on the left side as you face the display unit.) Turn the knob clockwise to increase brightness.

If all of the above points check out and your system still does not work, call the person from whom you bought your Touchscreen II. You can also refer to the section entitled "Answers to Your Questions" in the Current Information section of the *HP PC Communicator.* A recent copy is included with your Touchscreen II.

---

5. Push the power switch on the front of the display unit to the OFF position (push the button in, and release it; when the button is out, the power is OFF).

Installing Accessories

If you plan to install an accessory, such as a modem or memory card, or HP Touch, you should do it now—before you connect your disc drive, printer or plotter.*

Specific instructions for installing an accessory come with the card for that accessory. An illustration specific to the Touchscreen II is in Appendix D.

The HP Touch Accessory comes with the HP Touch Installation Guide. After you have installed HP Touch, you may also need to adjust the alignment and focus; instructions to perform these tasks are in the chapter on maintenance in *Using Your HP Touchscreen II*.

Finishing Up

Replace the cable covers by fitting the two plastic hooks on each cover into their corresponding notches on the display unit and snapping them into place. (If you intend to continue setting up your Touchscreen II at this time, you may wish to leave the covers off until you are done.)

**Installing accessory cards is much easier if no cables (such as those for printers, plotters, or disc drives) are connected to the back of the display unit.*

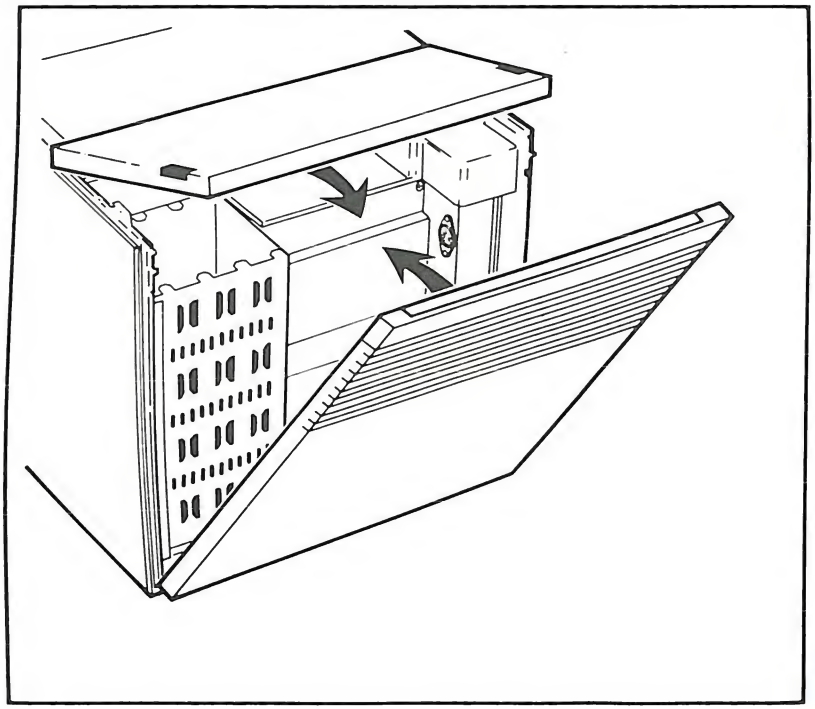

Figure 2-2. Replacing the Display Unit Cable Covers

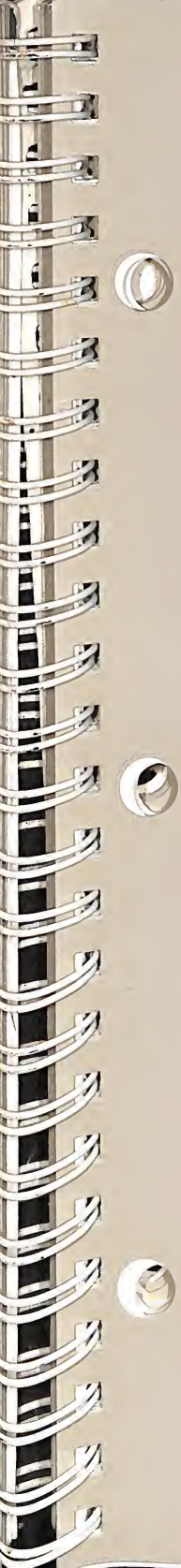

Chapter 3

Getting Ready to Connect Your Disc Drive

3-1 If You Have Either the HP 9123D or the HP 9133H Disc Drive

3-3 If You Have a Different HP Disc Drive

3 Getting Ready to Connect Your Disc Drive

If You Have Either the HP 9123D or the HP 9133H Disc Drive

Now you are ready to connect your disc drive unit. A number of disc drives are available for the Touchscreen II. In this book we cover the two disc drives that are most frequently purchased with the HP Touchscreen II. Both contain two drives and use double-sided flexible discs.

The HP 9123D dual flexible disc drive. If you have the HP 9123D, read the chapter titled Connecting the HP 9123D Flexible Disc Drive.

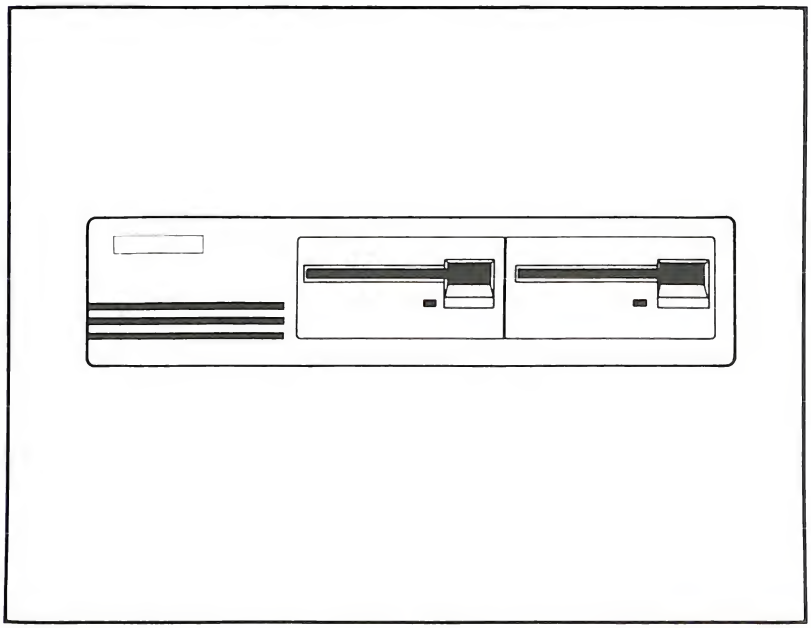

Figure 3-1. The HP 9123D Disc Drive

The HP 9133H fixed disc drive. If you have the HP 9133H, read the chapter, Connecting the HP 9133H Fixed Disc Drive.

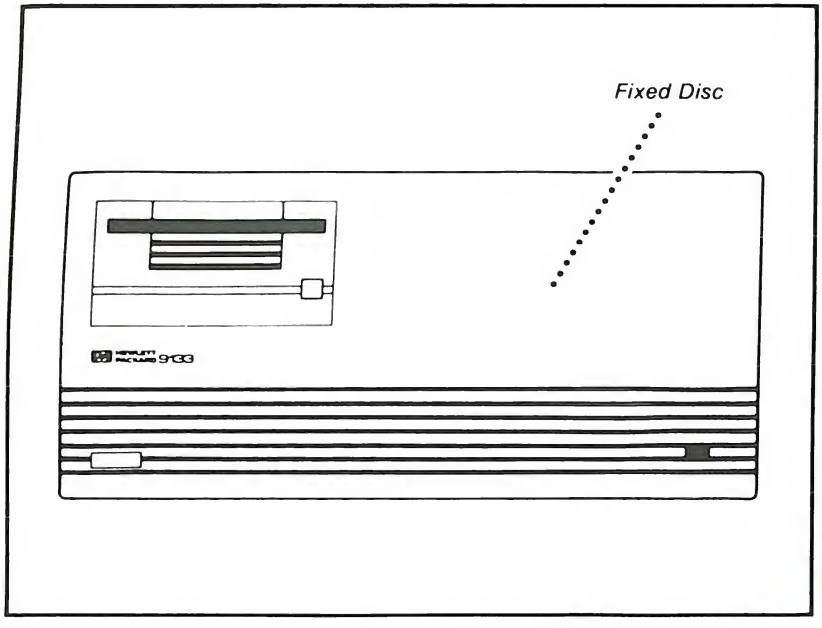

Figure 3-2. The HP9133H Disc Drive

If You Have a Different HP Disc Drive

If you have only one HP disc drive, but it is not the HP 9123D or the HP 9133H, read the appendix titled More HP Disc Drives and Tape Drives in *Using Your HP Touchscreen II*. In addition, the manual for your disc drive will give you more information.

Here is what to do once you have connected a disc drive that is not the HP 9123D or the HP 9133H:

If your disc drive is a dual flexible disc drive, go to the section entitled Loading the Operating System in the chapter, Connecting the HP 9123D Flexible Disc Drive.

If your disc drive is a fixed disc drive, go to the section entitled Loading the Operating System in the chapter, Connecting the HP 9133H Fixed Disc Drive.

Chapter 4

Connecting the HP 9123D Flexible Disc Drive

4-1 Preparing the HP 9123D Disc Drive
4-3 Connecting the Disc Drive to the Display Unit
4-10 Connecting Your Printer or Plotter
4-11 Loading the Operating System
4-17 Using MAKE WORKDISC
4-20 Configuring Your Disc Drive and Other Devices
4-21 Final Steps

4 Connecting the HP 9123D Flexible Disc Drive

Preparing the HP 9123D Disc Drive

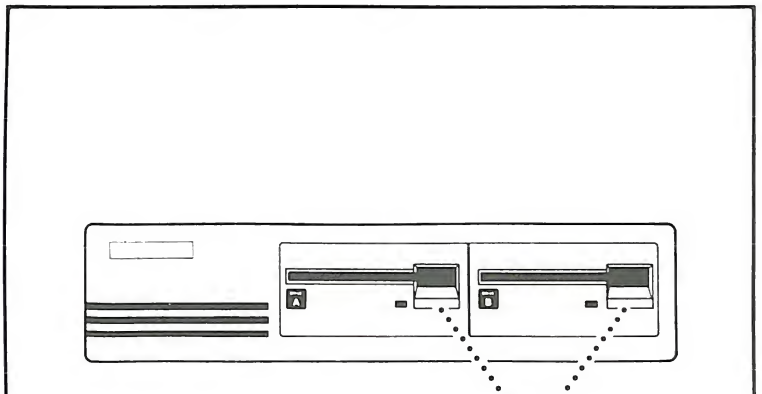

Figure 4-1. Your HP 9123D Disc Drive

Before connecting your HP 9123D disc drive, take out the sheet of stickers at the back of this book. Place an A sticker on the front of the left disc drive, and a B sticker on the front of the right disc drive, as shown in Figure 4-2. (A and B are the "names" that the computer uses to tell the two drives apart.)

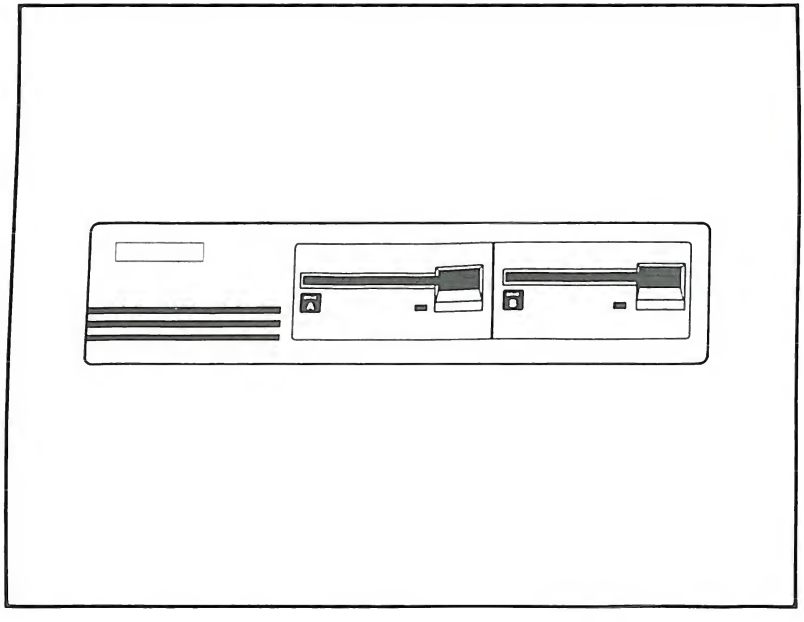

Figure 4-2. HP 9123D Disc Drive with A and B Drives Identified

Connecting the Disc Drive to the Display Unit

1. Make sure the **POWER** switch on the bottom front of the display unit is in the OFF position. (When the button is pushed in the power is ON, and when the button sticks out the power is OFF.)
2. If you have a **swivel unit** for your Touchscreen II, place it under the disc drive now.
3. Remove the plastic head protectors from the drives.
4. Place your display unit on top of the disc drive.

Note

Although instructions in this chapter refer to placement of the disc drive under the display unit, you can also stack it on top, if you prefer.

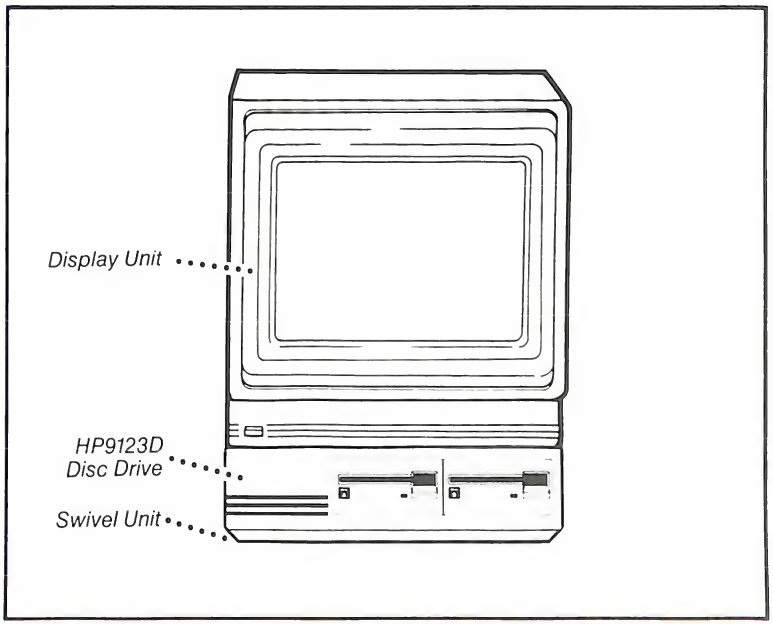

Figure 4-3. Stacking the Display Unit and Disc Drive

5. Turn the display unit and the disc drive around so that the back faces you.

   a. Remove the display unit cable covers (if you have not already done so) by pressing in on their right/left release tabs and lifting the covers off.

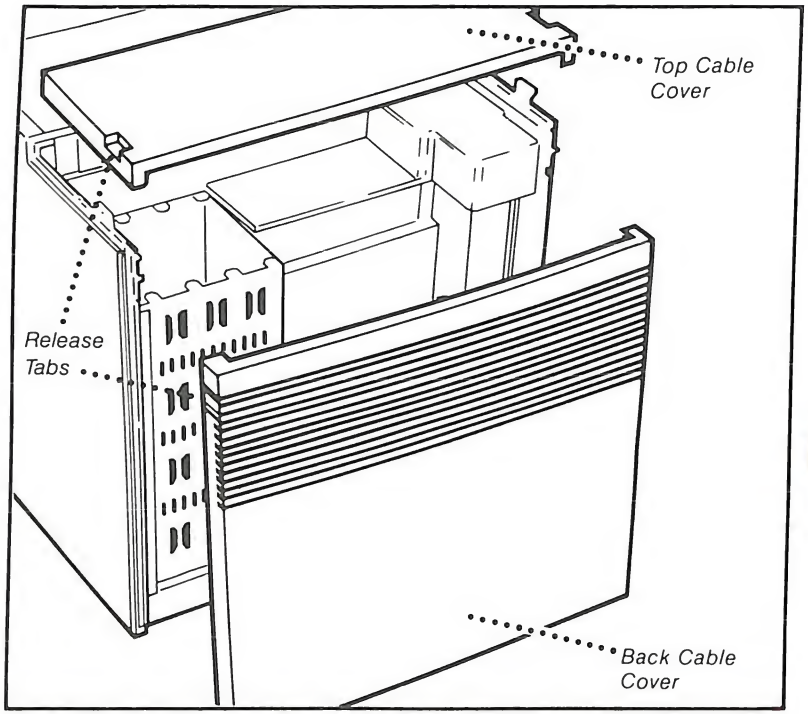

Figure 4-4. Display Unit Cable Cover Removal

b. Remove the disc drive cable cover by pressing in on the right/left release tabs and lifting it off.

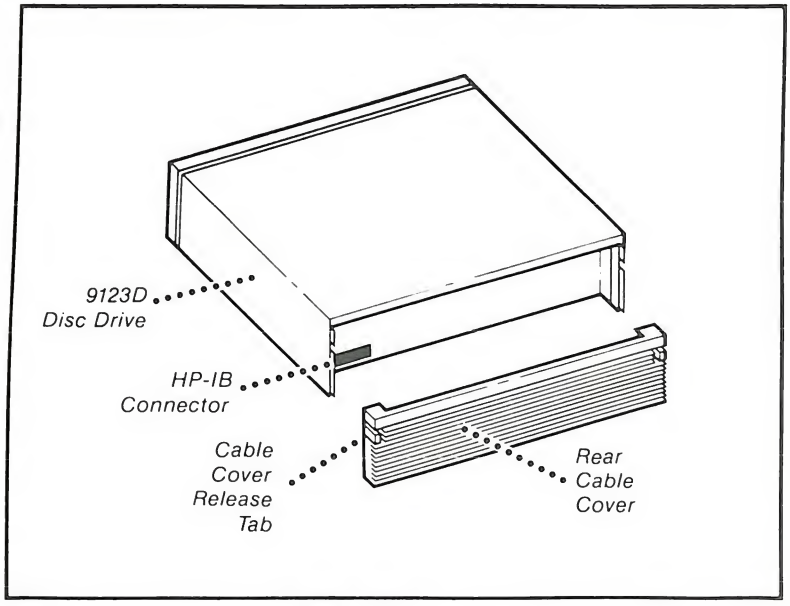

Figure 4-5. Disc Drive Cable Cover Removal

6. Now the connection points on both units are exposed and you are ready to attach the cables.

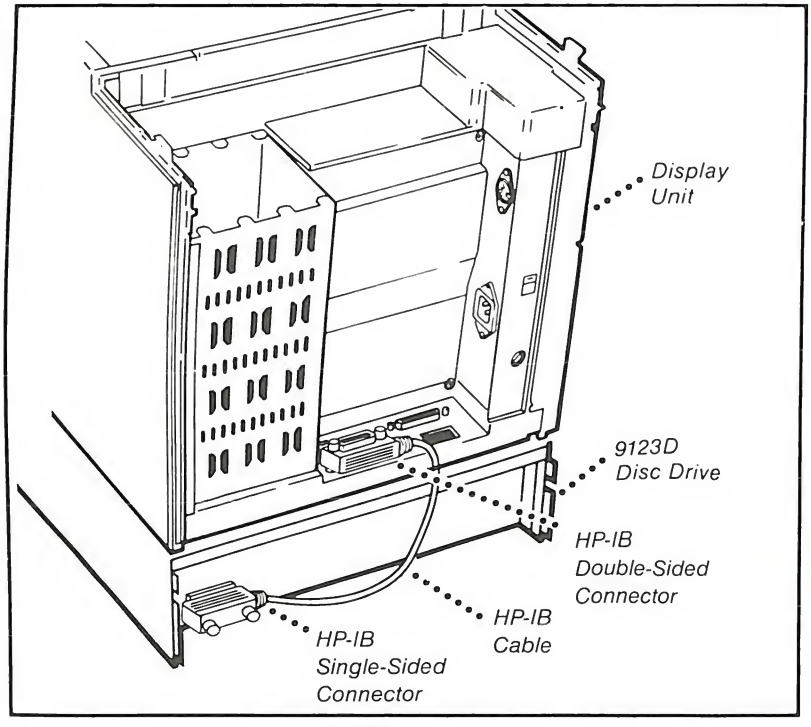

Figure 4-6. The HP 9123D HP-IB Cable

7. Notice that the connector heads at both ends of the cable are different. Use Figure 4-6 to see which end goes to which plug.

   a. Connect the HP-IB cable to the HP-IB connector on the display unit, and to the HP-IB connector on the disc drive, as shown in blue in Figure 4-8. (The connection points are labeled on the back panels of the disc drive and display unit.) Use your fingers to tighten the screws on each cable end to the connection.

8. Locate the power cord on the right side of the disc drive as you face the rear panel.

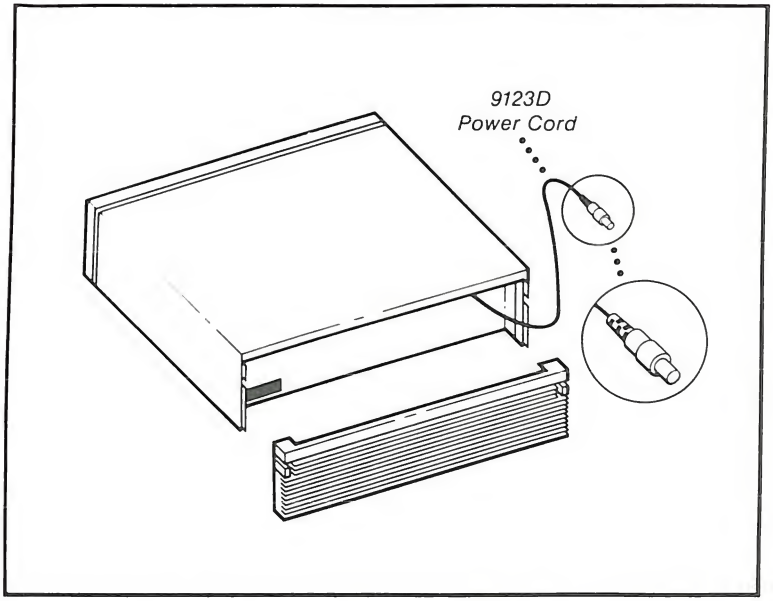

Figure 4-7. The HP 9123D Power Cord

9. Plug the power cord into the DC OUTPUT outlet on the back of the display unit, as shown in red in Figure 4-8.

Because you have connected the disc drive to the display unit with the disc drive's power cord, your disc drive receives its power from the display unit.

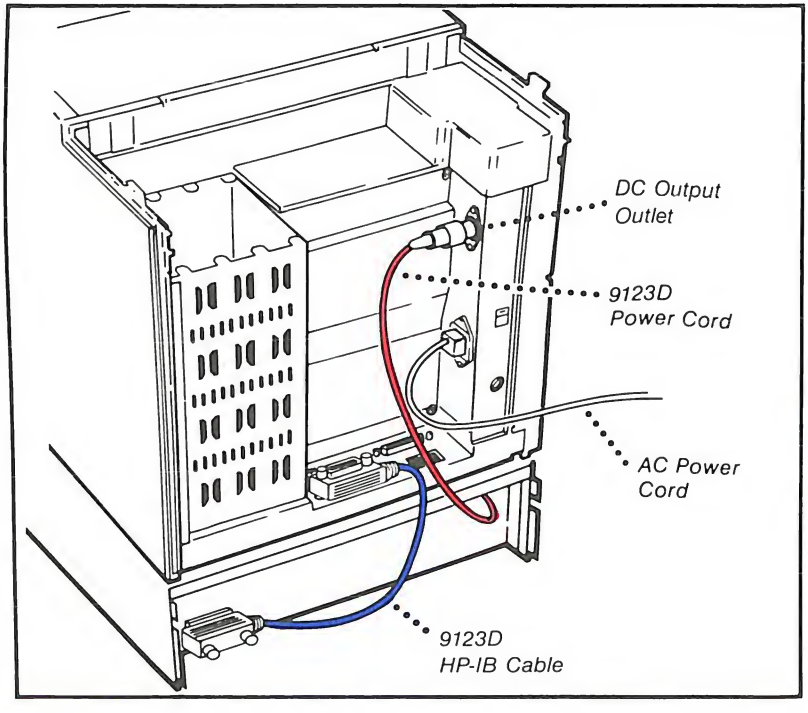

Figure 4-8. Display Unit and HP 9123D Connected

10. Turn ON the POWER switch for the display unit and the disc drive.

The system display unit and disc drive should now be powered on. You might see a red light on the front of the drive blink and off once or twice rather quickly. If you don't see the light, don't worry; it flashes only briefly.

You will see the following message on the screen after a few seconds:

```
Load 0p Sys failed, 0p Sys disc not found
Press RETURN To Clear
```

This message is similar to the one you saw when you did the Power-On Self-Test. Even though you have now attached the disc drive, you still have not inserted a disc. The system is looking for a disc which, of course, is not there.

If Something Went Wrong

If this particular message does not appear, check that:

- The POWER switch for the computer is ON.
- The power cord from the disc drive is properly plugged in to the DC OUTPUT outlet on the back of the display unit.
- The HP-IB cable is firmly connected.
- The electrical outlet that the display unit is plugged into is functioning. (You might try plugging a lamp into the same wall outlet or multiple-outlet strip.)

If you are still not getting any response from your system, call the person from whom you bought your Touchscreen II. You can also refer to the section entitled "Answers to Your Questions" in the Current Information section of the *HP PC Communicator*. A recent copy is included with your Touchscreen II.

11. Turn OFF the computer POWER switch (on the front of the display unit). The POWER switch turns both the display unit and the disc drive ON and OFF.

Now that you have connected your disc drive to your display unit, you have a computer.

Connecting Your Printer or Plotter

At this point, you are ready to connect any printers or plotters you may have. Appendix A gives instructions on how to connect these printers and plotters:

- HP 2225A ThinkJet Printer
- HP 2225D ThinkJet Printer
- HP 2227A QuietJet Plus Printer
- HP 2603A Daisywheel Printer
- HP 2686A LaserJet Printer
- HP 2686 LaserJet Plus Printers
- HP 7440A ColorPro Graphics Plotter (eight-pen)
- HP 7475A Graphics Plotter (six-pen)

If you have a different printer or plotter, refer to Appendix D, More HP Printers and Plotters in *Using Your HP Touchscreen II*, or refer to the manual that came with the printer or plotter.

Now turn to Appendix A to connect your printer and/or plotter.

After you have connected the printer(s) and/or plotter(s) to your Touchscreen II, you must load the operating system. This is explained in the next section.

If you do not have a printer or plotter to connect, proceed to the next section, entitled Loading the Operating System.

Loading the Operating System

As you may know, you must start each computer session by having the computer load the operating system—the "brains" of the computer—from a disc into memory. When the operating system is loaded, it still exists on the flexible disc, but a copy of it has been put into the computer's memory. This procedure is also called "booting up."

1. Make sure the computer is turned OFF.
2. Remove the disc labeled System Master Disc from the back of the *Using Your HP Touchscreen II* binder.

Note

For most purposes, use a work disc and not the master disc. In this way, you will protect your master discs from being damaged. Master discs should be used only for making work discs. You cannot make another work disc from a work disc.

The next section, Using Make WorkDisc, will explain how to make a system work disc from your System Master Disc, using the Make WorkDisc application.

Remember that flexible discs are sensitive. Don't leave them where they can be exposed to excessive heat, dust or moisture. Keep your discs away from sources of magnetism, including telephones. For more information, see the chapter on Discs in *Using Your HP Touchscreen II.*

3. Hold the disc so that the label is on top and the metal part is away from you.

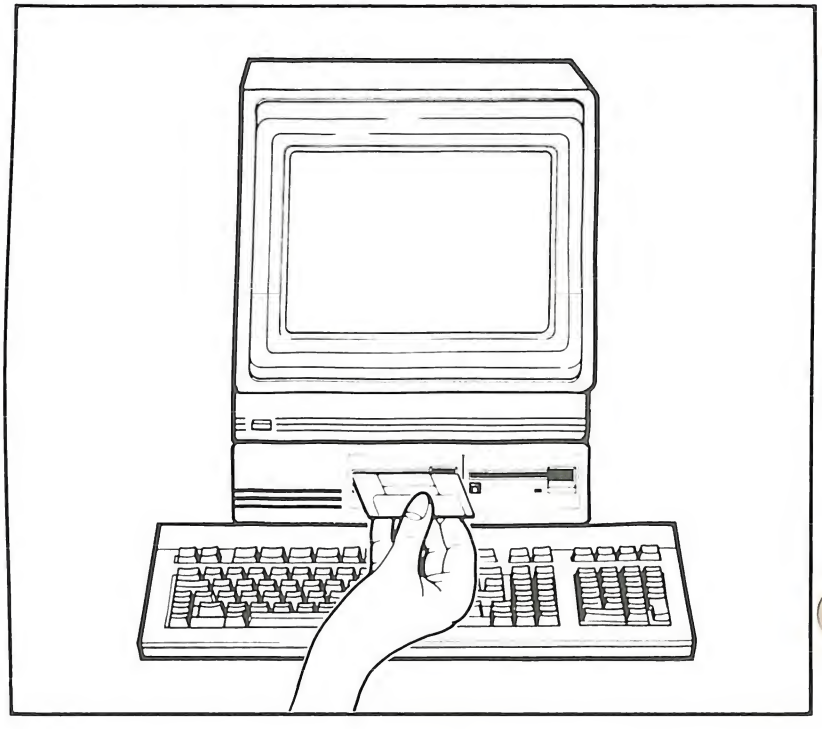

Figure 4-9. Inserting the System Master Disc

4. Insert the disc into drive A. Push the disc gently, but firmly, until it clicks into place. (To remove a disc, push the button below the drive.)

Caution

NEVER remove a disc when the red light under the disc drive is on. If you do so, you may destroy the information on your disc.

5. Turn ON the computer. Remember that your disc drive receives its power from the display unit. After a few seconds this display will appear on your screen.

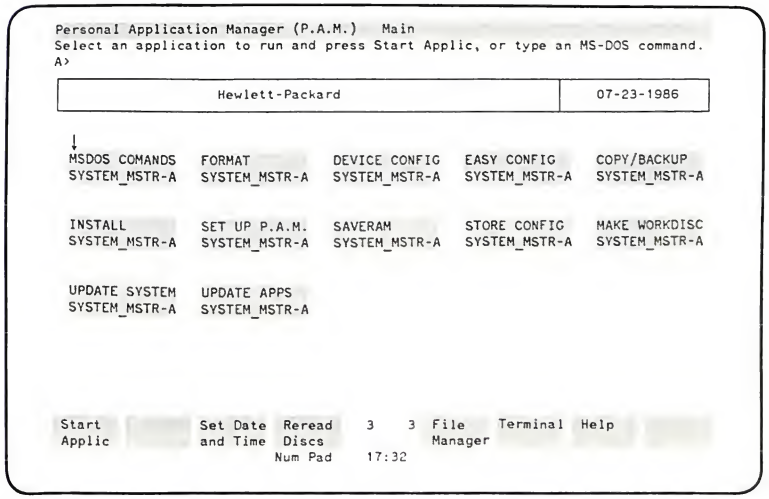

Figure 4-10. The Personal Applications Manager Screen

This is the Personal Applications Manager (P.A.M.) Main menu. P.A.M. helps you manage your application programs.

If Something Went Wrong

If the P.A.M. Main menu does not appear, perform a hard reset, as described in the section that follows.

Hard Reset

To perform a hard reset, hold down CTRL and Shift and press Reset Break at the same time. Then release all three keys. This action loads the operating system into the computer's memory.

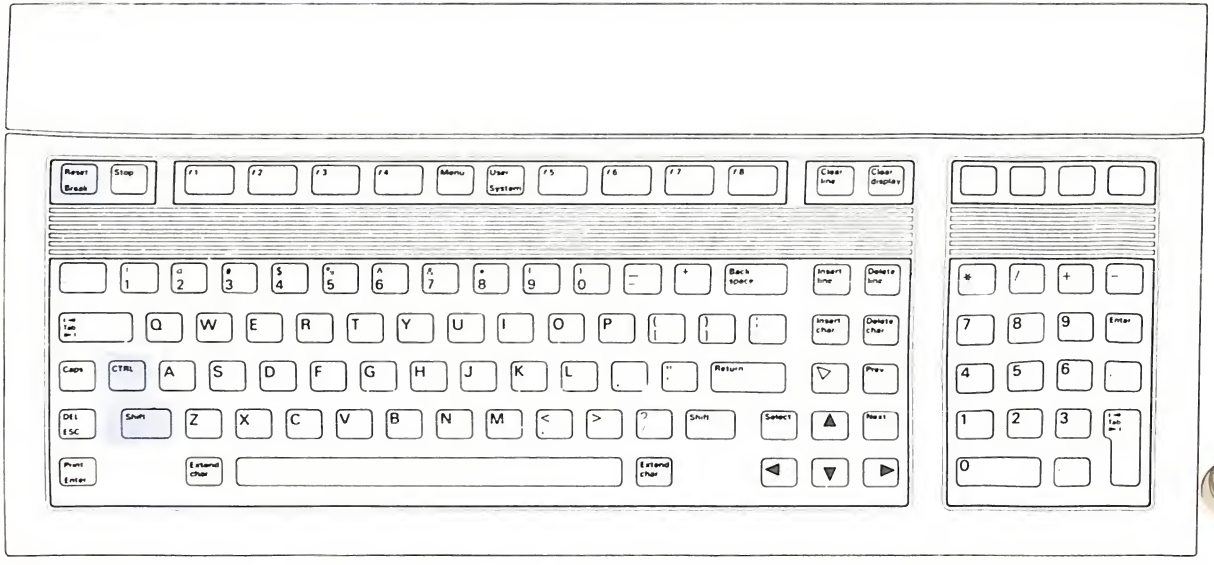

Figure 4-11. Keys for Hard Reset

The Command Line

If you look on the third line of the P.A.M. Main menu, you will see a capital letter followed by the "greater than" (>) character. This is called either the command-line prompt, or the MS-DOS system prompt. The letter tells you which disc drive is the active drive.

The command line is a helpful feature because you can type MS-DOS commands directly from P.A.M. To learn more about the MS-DOS system prompt, refer to the *Using Your HP Touchscreen II Personal Computer Supplement*, which came with your Touchscreen II.

There are twelve large boxes on the screen, as pictured in Figure 4-12. Each box contains the name of an application, such as MSDOS COMANDS and SAVERAM, found on your System Work Disc. You can select an application either by touching the screen (if you have installed your HP Touch accessory) or by using the [Tab] and backtab ([Shift] [Tab]), or cursor control ([◄] [►] [▲] [▼]) keys.

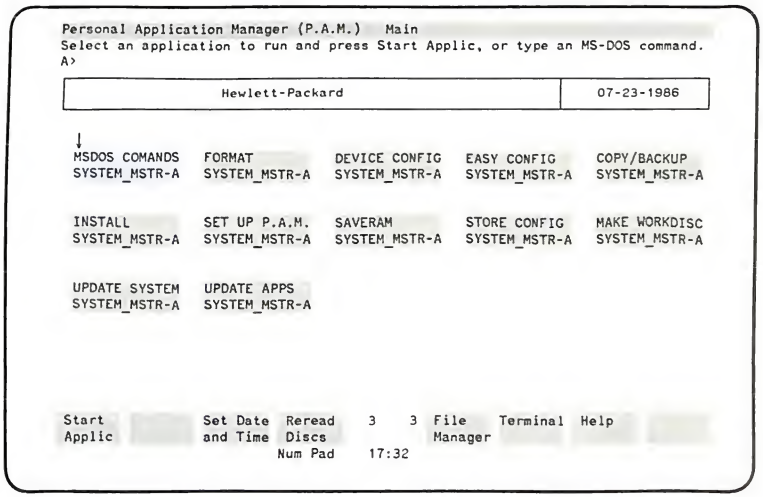

Figure 4-12. P.A.M. Main Menu With MSDOS Selected

Notice that the first box, MSDOS COMANDS, is highlighted. If you select FORMAT, the highlight is no longer on MSDOS COMANDS, but is on FORMAT. Whichever box you select becomes highlighted. Do not choose any of the small boxes at the bottom of the screen.

Note

Two kinds of input devices are commonly used with the Touchscreen II: the keyboard that comes with all Touchscreen IIs, and HP Touch, an accessory that allows you to make choices by touching your screen.

The instructions in this manual are directed to both keyboard and HP Touch users. How you communicate with the computer depends upon which input device you have. For example, the function keys ([f1] through [f8]) have corresponding labels on the screen. To activate a function, you can press the function key on the keyboard, or, if you have the HP Touch accessory, you can touch the label on the screen.

To make a selection from the Menu, you can move the highlight using the [Tab] key (to move forward) or the [Shift] and [Tab] keys (to move backward) or the cursor control ([◄] [►] [▲] [▼]) keys. Or, if you have the HP Touch accessory, you can touch the appropriate place on the screen.

Whenever the instruction "press" is used alone, it means the key on the keyboard has no corresponding screen label ([Return] and [Reset Break], for example), and you must press the key even if you have the HP Touch accessory. For more information on how to use the two input devices, see the chapter entitled Introducing the HP Touchscreen II in *Using Your HP Touchscreen II*.

Made a Mistake?

Did you touch the wrong box? For example, if you touched `Start Applic` (f1) you actually started one of the applications.

If you have a blank screen with an A>, you are in MSDOS COMANDS. To get back to P.A.M., type EXIT and press Return.

If you see a set of labels in the boxes at the bottom of your screen which don't match the ones at the bottom of the P.A.M. Main menu, touch the label that has the word Exit (or press f8 on the keyboard).

If there is no label that says Exit, perform a hard reset, as described in the previous section (Figure 4-11).

Using MAKE WORKDISC

You need to make a working copy of the System Master Disc you received with your Touchscreen II. Use the application MAKE WORKDISC on the P.A.M. Main menu to do this.

MAKE WORKDISC performs three major functions: it **formats and copies the operating system** onto a new disc, **installs (copies) the System Master Applications** on the new disc, and **copies the MS-DOS utility commands** to the new disc in one process.

Before You Begin

Before you use MAKE WORKDISC, you should know the following:

- Formatting is the first function of MAKE WORKDISC. Formatting is a process that prepares a new disc to receive data. The MAKE WORKDISC application formats your new disc, and copies the operating system as part of the formatting process. You do not use the FORMAT application on the P.A.M. Main menu to format your disc before running MAKE WORKDISC.
- Installing all the System Master Applications is the second function of MAKE WORKDISC. Installing is the process of copying an application from a Master disc to a work disc. This is a list of the System Master applications that MAKE WORKDISC installs:
  - MS-DOS COMMANDS
  - FORMAT
  - DEVICE CONFIG
  - EASY CONFIG
  - COPY/BACKUP
  - INSTALL
  - SET UP P.A.M.
  - SAVERAM
  - STORE CONFIG

MAKE WORKDISC does not install MAKE WORKDISC, UPDATE SYSTEM, or UPDATE APPS.

- Copying the MS-DOS utilities is the third function of MAKE WORKDISC.

Making a Work Disc

Use MAKE WORKDISC to make a working copy of your System Master Disc. Perform the following steps:

1. Start with your System Master Disc in drive A.
2. Insert a new, unformatted, double-sided disc in the B drive of your 9123D disc drive. Make sure the disc is in all the way and you hear the disc click into place.
3. Start at the P.A.M. Main menu and find the box labeled MAKE WORKDISC. Touch the application box on the display, or [Tab] over to the box, until it is highlighted.
4. Touch Start Applic or press [f1] to start the MAKE WORKDISC application.
5. The computer takes a few seconds to load the application. You see this message on the screen:

```
Loading MAKE WORKDISC
```

Then, you will see this:

```
A>ECHO OFF
*** Installation will be from disc "A:" to disc
"B:".
*** If this is NOT correct, hold down [CTRL] and
press "C".
*** If this IS correct, press any alphanumeric
key to continue.
Strike a key when ready...
```

6. Press [Return].

If you do not wish to continue, hold down the [CTRL] key and press C, and the P.A.M. Main menu will reappear.

7. When you press a key to continue the MAKE WORKDISC process, the application proceeds to format, install and copy from the System Master Disc in drive A to the new disc in drive B. The MAKE WORKDISC procedure takes approximately 15 minutes to complete.

What You see on the Screen

During MAKE WORKDISC, you see on the screen the names of the files that are being installed in each application. You see the names and version numbers of the applications being installed, and the amount of space remaining on the disc throughout the procedure. You will see `Install Completed` on the screen after each application is installed.

When MAKE WORKDISC is complete, the P.A.M. Main menu reappears. The disc in the B drive is now a System Work Disc. Remove your System Master Disc from drive A and put it in a safe place. Place a label or your new System Work Disc and label it "System Work," and date it. Insert your new System Work Disc in the A drive the next time you start your Touchscreen II.

Turn OFF power to your Touchscreen II.

Configuring Your Disc Drive and Other Devices

Every time you connect a device to your computer, you must configure it. Configuring a device gives the computer certain important information which it must have so that the device and the computer can communicate.

You will only have to configure your disc drive once, unless you add new drives later. Also, if you have connected printers, plotters, a modem, or other devices, you should configure them now. You need to configure all these devices to let the Touchscreen II know where they are. Go to Appendix B to find out how to configure your entire HP Touchscreen II Personal Computer system.

Final Steps

1. Replace the cable covers on the display unit and on the HP 9123D disc drive.
2. Check that you have:
   - set up the display unit and connected the keyboard.
   - conducted the power-on self-test for the display unit.
   - connected and labeled the disc drive(s).
   - connected the printer(s) and/or plotter(s), and conducted the self-test(s).
   - started up the computer (i.e., loaded the operating system).
   - created a System Work Disc.
   - configured your system.

   If you have done everything on the list, congratulate yourself! Only one step in setting up your system remains: making application work discs.

Installing Applications Onto Work Discs

When you order an application, such as WordStar or VisiCalc, you will receive one set of master discs. You need to copy the application from the master disc to another disc, and put the master disc in a safe place. The disc with the copy of the program, which you will normally use, is called the "work disc." Full instructions for making application work discs are provided in Chapter 9 in *Using Your HP Touchscreen II Personal Computer.* However, they are also summarized below.

a. Before you can make a work disc, you must format a disc. (Formatting is the process of preparing a new, blank disc to store information.) Format a new, blank disc, using the Format application. Turn to page 6-1 of Formatting and Copying/Backing Up Discs in the *Using Your HP Touchscreen II* manual and follow the instructions.

Note When you have formatted the disc, return to this manual and read step b.

---

b. Put a copy of the application on the formatted disc, using the Install application. (Note that you use INSTALL, **not** COPY/BACKUP, to make work discs. The COPY/BACKUP application has other purposes.) Turn to page 9-1 of Installing Applications and Using Set Up P.A.M. in the *Using Your HP Touchscreen II* manual and follow the instructions.

After you have made work discs, you are ready to begin using your HP Touchscreen II personal computer. You could now begin a work session and, for example, use the WordStar application to do word processing. Information on starting a work session, working with P.A.M. (Personal Applications Manager), and much more can be found in *Using Your HP Touchscreen II*. To begin using an application, please refer to the instructions that came with it.

Chapter 5 Connecting the HP 9133H Fixed Disc Drive

5-1 Preparing the HP 9133H Disc Drive
5-6 Connecting the Disc Drive to the Display Unit
5-11 Connecting Your Printer or Plotter
5-12 Loading the Operating System
5-19 Using MAKE WORKDISC
5-22 Changing the Address of Your Fixed Disc Drive
5-23 Configuring the Fixed Disc Drive and Other Devices
5-24 Renaming Your Disc Drive
5-25 Installing Applications onto Your Fixed Disc
5-26 Final Steps

5 Connecting the HP 9133H Fixed Disc Drive

Preparing the HP 9133H Disc Drive

Your HP 9133H disc drive contains one disc drive for flexible (floppy) discs and one drive for your fixed (hard) disc. You can't see your fixed disc or its drive. They are built into the disc drive unit. You will use your flexible drive for tasks like installing new applications (software) onto your fixed disc and creating backup discs.

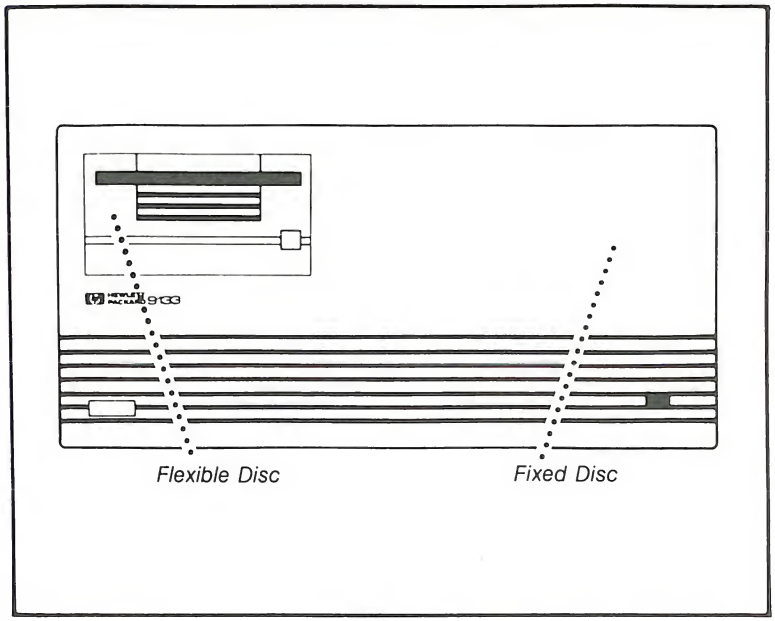

Figure 5-1. HP 9133H Disc Drive

You must now take the following steps:

1. Make sure the power switch on the front of the disc drive is in the OFF position. (The power switch, marked LINE, has two positions. When the button is pushed in the power is ON, and when it sticks out the power is OFF.)

Caution

Your HP 9133H fixed disc drive is fragile. Dropping it more than one inch can cause permanent damage.

---

2. Turn your disc drive around so that you are looking at the back panel.

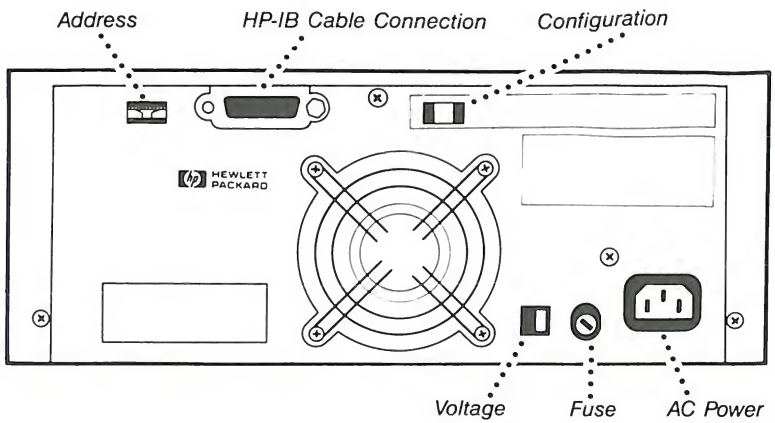

Figure 5-2. HP 9133H Rear Panel

3. Set the address wheel to 9 as the illustration shows.

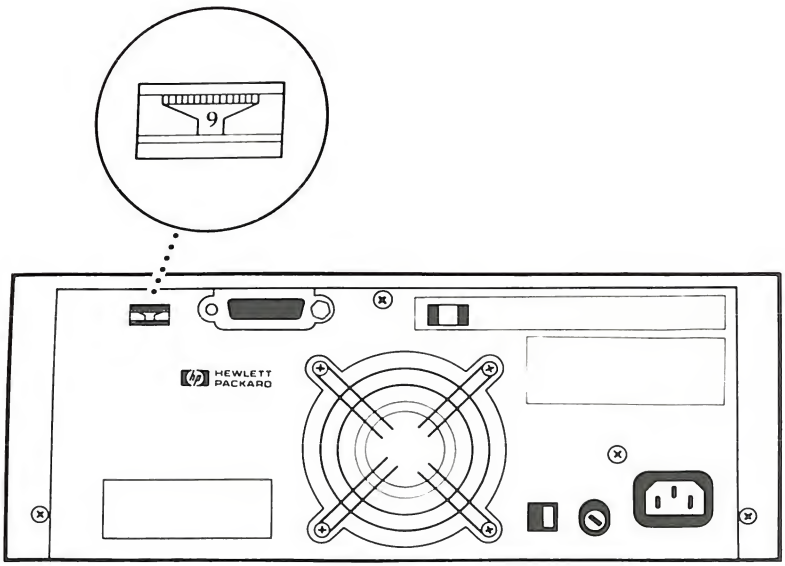

Figure 5-3. HP 9133H Address Wheel

4. Make sure the setting of the configuration switch is 0. (If it is not at 0, use a screwdriver to change it.)

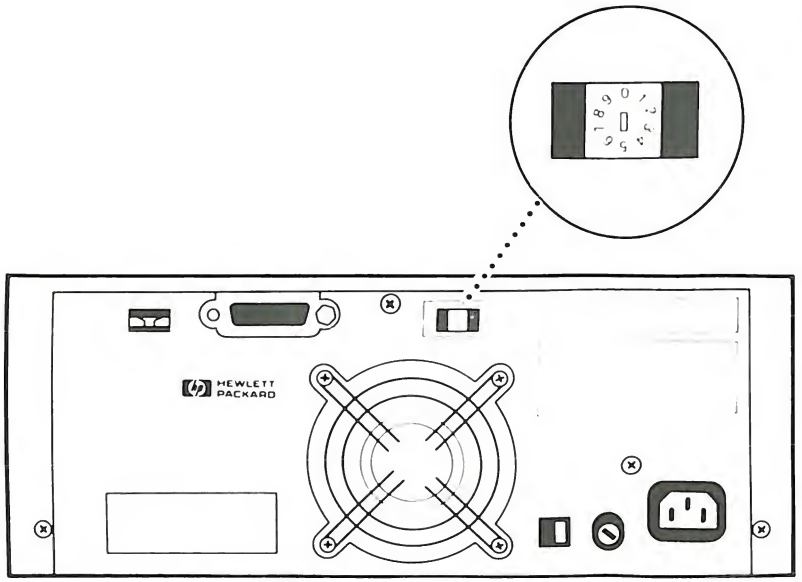

Figure 5-4. HP 9133H Configuration Switch

5. Make sure the voltage switch is set to the voltage in your area. The voltage in the U.S. is 115 VAC, as shown in the Figure 5-5. (To change the voltage setting, push the switch to the right with a ball point pen for 115 VAC and to the left for 230 VAC.)

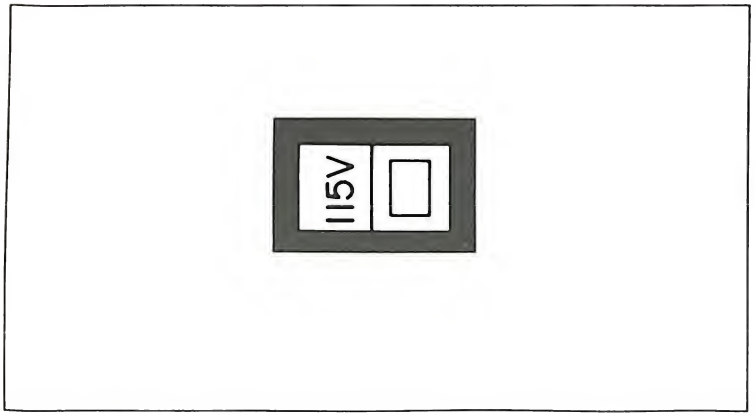

Figure 5-5. HP 9133H Voltage Switch Set for U.S.

Connecting the Disc Drive to the Display Unit

If you have a **swivel unit** for your HP Touchscreen II, place it under your 9133H now, so that when you stack your equipment you can easily rotate the entire stack.

1. Place your display unit on top of the disc drive.

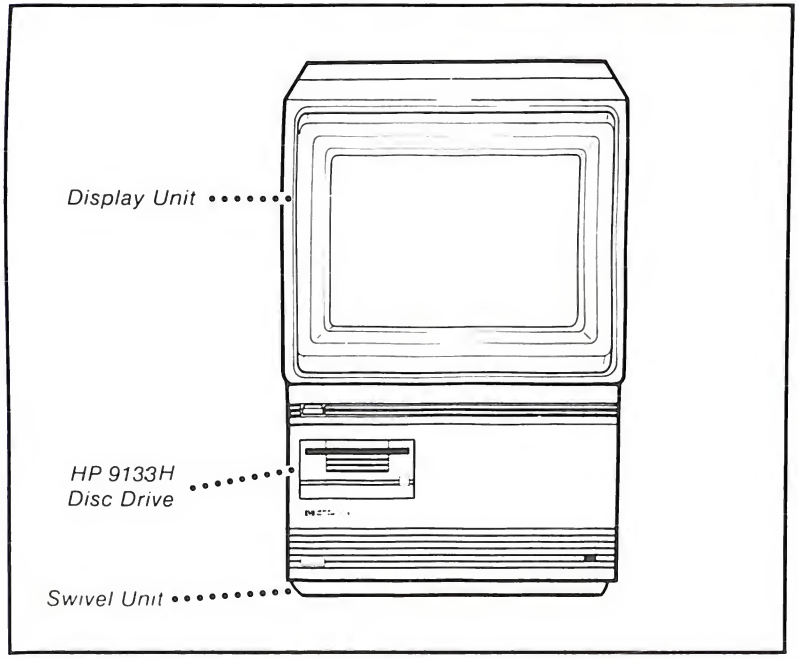

Figure 5-6. Stacking the Display Unit and Disc Drive

2. Turn the display unit and the disc drive around so that the back faces you.

3. Find the HP-IB cable as pictured below.

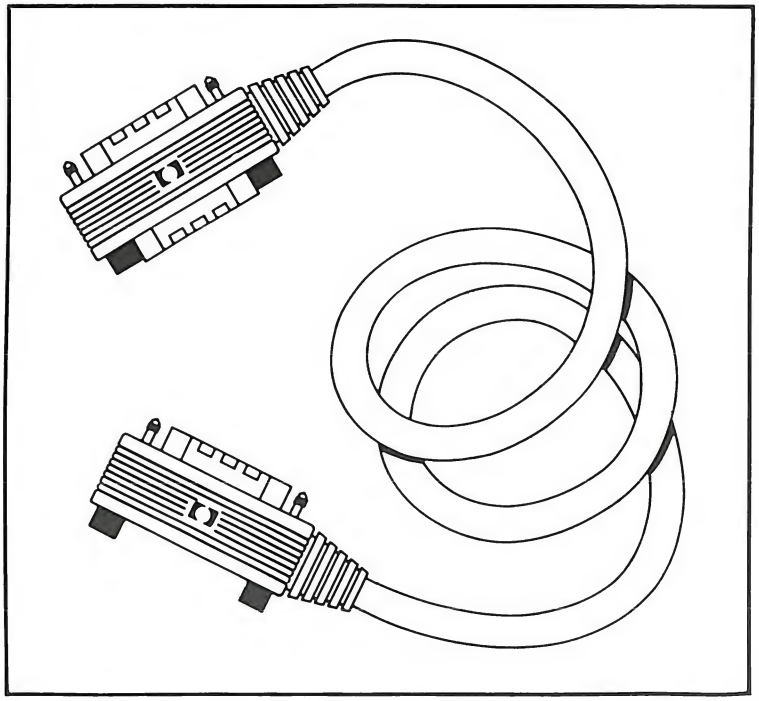

Figure 5-7. The HP-IB Cable

4. Connect the HP-IB cable to the display unit and the disc drive, as highlighted in blue in Figure 5-9. Notice that the cable ends are different. The picture shows which end goes to which plug. (The connection points are labeled HP-IB on the back panels of the disc drive and display unit.) Using your fingers, secure the cable by tightening the screws on each cable end to the connection.

5. Find the power cord pictured below.

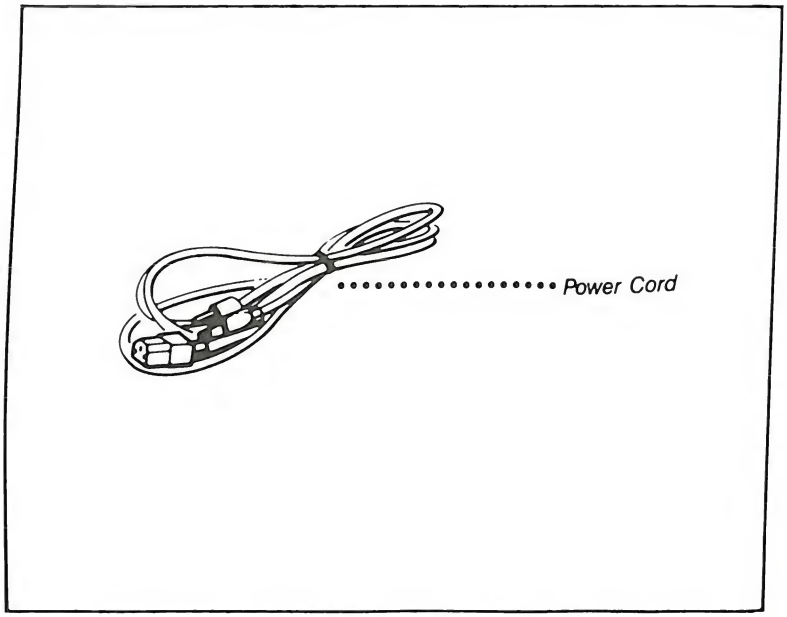

Figure 5-8. The Power Cord

6. Plug one end of the disc drive's power cord into the AC LINE outlet on the back of the disc drive and the other end into a wall socket.

Warning

DO NOT USE EXTENSION CORDS UNDER ANY CIRCUMSTANCES! Extension cords can cause data errors and may also be a fire hazard. The Power cord for your computer and the HP 9133H Disc Drive must be plugged into a grounded three-pronged outlet with a controlling circuit breaker. You may use a multiple-outlet strip if it meets these requirements.

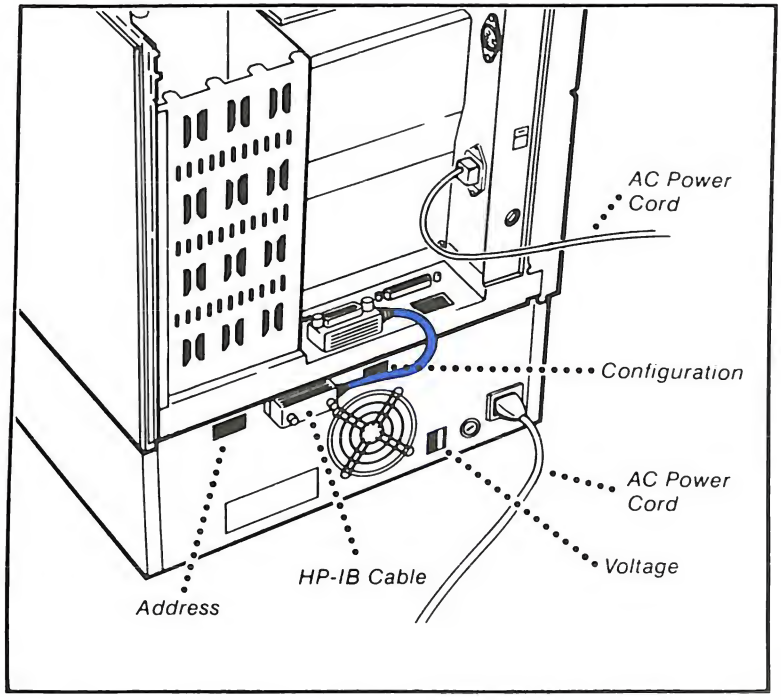

Figure 5-9. Display Unit and HP 9133H Connected

7. Turn the display unit and the disc drive around so that the front faces you. Turn ON the disc drive's power switch. (Press the button marked LINE on the front panel one or two times until the button is pushed IN.)

   You may now hear the whirring noise of the drive and fan. You may also see a red light and a yellow light on the front of the drive. The red light indicates that the disc drive is looking for information on the disc. The yellow light indicates that the system is performing a self-test. Both lights should go off after about 60 seconds.

If Something Went Wrong

If you don't hear or see anything, check that:

- The disc drive's power switch is ON.
- The disc drive's power cord is plugged into the AC LINE outlet on the back of the disc drive and into the wall outlet.
- The electrical outlet that the disc drive is plugged into is functioning. (Try plugging a lamp into the wall outlet or multiple-outlet strip.)

If you still are not getting any response from your disc drive, call your dealer or the appropriate HP support person from the list in your *Series 100 Support Guide* (included in the literature envelope you received with your Touchscreen II).

If the yellow "fault" light does not go off after 60 seconds, turn off the disc drive. Then turn it on again and let it repeat the self-test. If the fault light is still on after this self-test, call the persom from whom you bought your Touchscreen II. You can also refer to the section entitled "Answers to Your Questions" in the Current Information section of the *HP PC Communicator.* A recent copy is included with your Touchscreen II.

Because your disc drive and your display unit are connected separately to the power, when you use your system, you must remember to turn on both your disc drive and your display unit.

8. Turn OFF the disc drive.

Now that you have connected your disc drive to your display unit, you have a computer.

Connecting Your Printer or Plotter

At this point, you are ready to connect any printer(s) or plotter(s) you may have. Appendix A gives instructions on how to connect these printers and plotters:

- HP 2225A ThinkJet Printer
- HP 2225D ThinkJet Printer
- HP 2227A QuietJet Plus Printer
- HP 2603A Daisywheel Printer
- HP 2686A LaserJet Printer
- HP 2686 LaserJet Plus Printers
- HP 7440A ColorPro Graphics Plotter (eight-pen)
- HP 7475A Graphics Plotter (six-pen)

If you have a different printer or plotter, refer to the Appendix titled More HP Printers and Plotters in *Using Your HP Touchscreen II*, or see the manual that came with the printer or plotter.

Turn now to Appendix A in this manual to install your printer(s) and plotter(s). Then come back to the next section of this chapter.

If you do not have a printer or plotter to connect, proceed to the next section, entitled Loading the Operating System.

Loading the Operating System

Before you can use your computer, you must load the operating system—the "brains" of the computer—from a disc into memory. When the operating system is loaded, it still exists on the disc, but a copy of it has been put into the computer's memory. This procedure is also called "booting up."

Follow the steps below to load the operating system into computer memory. (Although the 9133H is used as the example, these steps also apply to the 9133D and the 9153.)

1. Turn your computer around, so that the front panel faces you.
2. Turn OFF the display unit.

3. Take out the sheet of stickers from the back of this booklet. Place the A sticker on the front of the flexible disc drive and the B sticker on the front of the fixed disc drive. (A and B are the "names" the operating system will use to tell the two apart.)

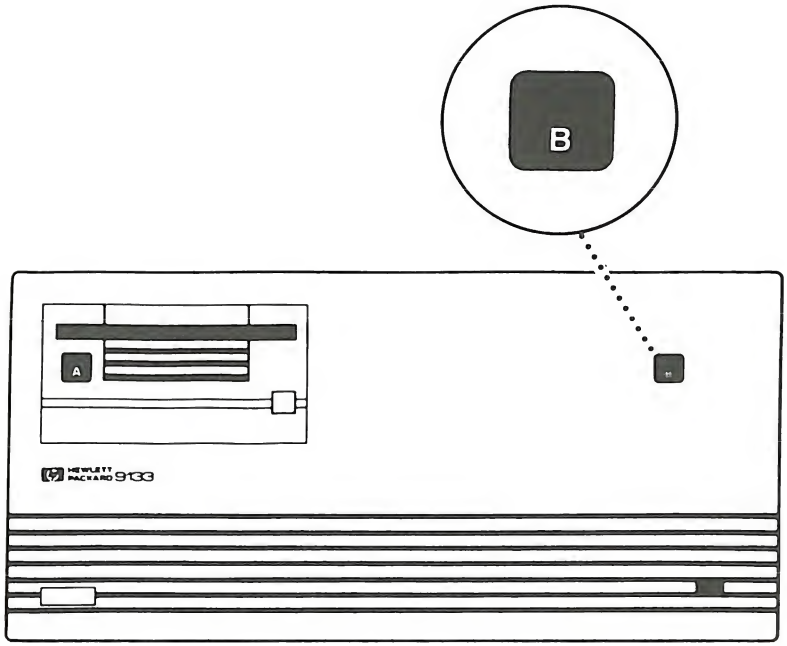

Figure 5-10. The HP 9133H with A and B Drives Identified

4. Remove the disc labeled System Master Disc from the back of the *Using Your HP Touchscreen II* binder.

Note

For most purposes, use a work disc and not a master disc. In this way, you will protect your master disc from being damaged. Master discs should be used only for making work discs. You cannot make a work disc from a work disc.

5. Hold the disc so that the label is on top and the metal is away from you.
6. Insert the disc into the flexible disc drive. Push the disc gently, but firmly, until it clicks into place. (To remove a disc, push the button below the drive.)

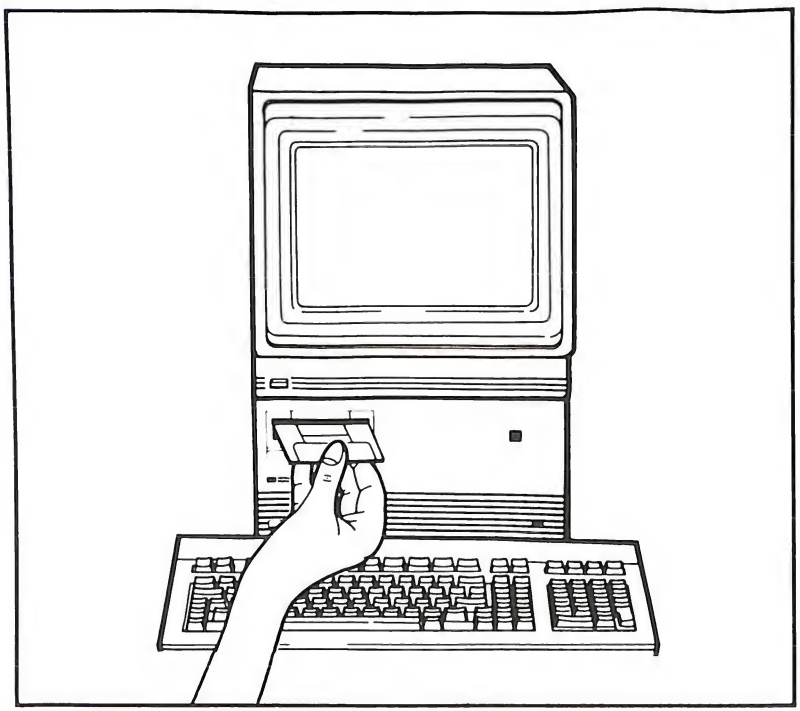

Figure 5-11. Inserting a Flexible Disc in the HP 9133H

Caution

Never remove a disc from the disc drive while the red light is on. If you do, you may destroy the information on the disc.

Also, flexible discs are sensitive. Don't leave them where they will be exposed to excessive heat, dust, moisture, or sources of magnetism, including telephones.

For more information on discs, see the chapter entitled Handling and Using Discs in *Using Your Touchscreen II*.

7. Make sure your disc drive is turned ON. The button marked LINE should be pushed IN.
8. Turn ON the computer.
9. This display should come onto your screen after a few seconds:

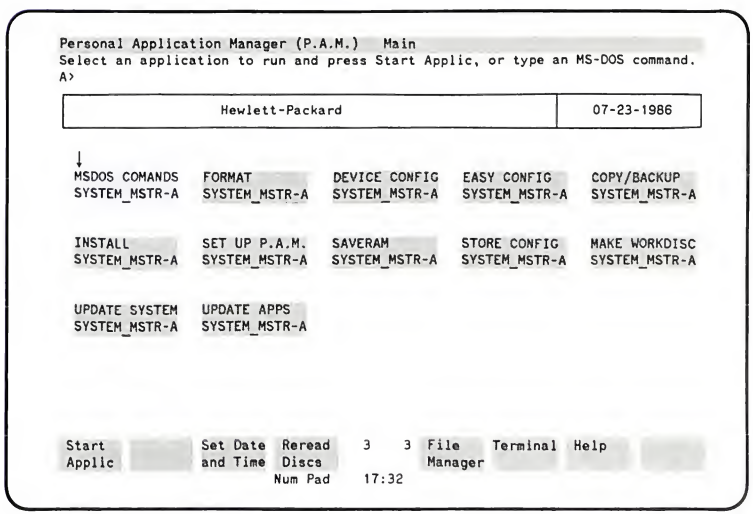

Figure 5-12. P.A.M. Main Menu

This is the Personal Applications Manager (P.A.M.) Main menu. P.A.M. helps you manage your applications, such as MSDOS COMANDS and SAVERAM. There are twelve large boxes in the top half of the screen. Each box contains the name of a P.A.M. application found on your System Master Disc.

If Something Went Wrong

If the message:

```
Load Op Sys failed, no Op Sys on disc.
Press Return To Clear.
```

appears on the screen, perform a hard reset. (Hold down CTRL and Shift and at the same time press Reset Break.)

Hard Reset

To perform a hard reset, hold down CTRL and Shift and press Reset Break at the same time. Then release all three keys. This action loads the operating system into your computer's memory.

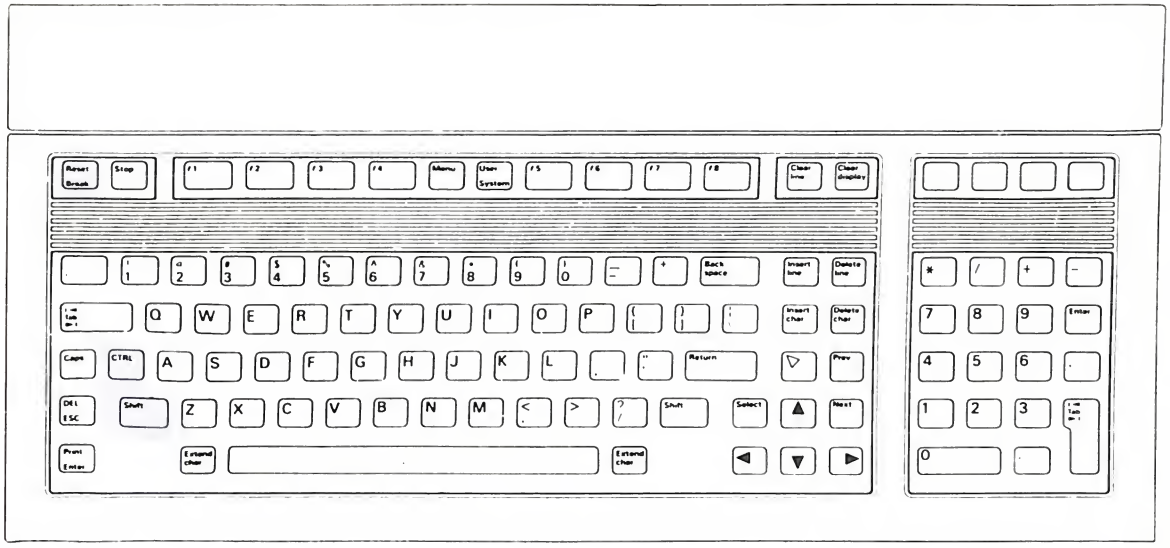

Figure 5-13. Keys for Hard Reset

The Command Line

If you look on the third line of the P.A.M. Main menu, you will see a capital letter followed by the "greater than" (>) character. This is called either the command-line prompt, or the MS-DOS system prompt. The letter tells you which disc drive is the active drive.

The command line is a helpful feature because you can type MS-DOS commands directly from P.A.M. To learn more about the MS-DOS system prompt, refer to the *Using Your HP Touchscreen II Personal Computer Supplement*, which came with your Touchscreen II.

Note

Two kinds of input devices are commonly used with the Touchscreen II: the keyboard that comes with all Touchscreen IIs, and HP Touch, an accessory that allows you to make choices by touching your screen.

The instructions in this manual are directed to both keyboard and HP Touch users. How you communicate with the computer depends upon which input device you have. For example, the function keys ([f1] through [f8]) have corresponding labels on the screen. To activate a function, you can press the function key on the keyboard, or, if you have the HP Touch accessory, you can touch the label on the screen.

To make a selection from the Main menu, you can move the highlight using the [Tab] key (to move forward) or the [Shift] and [Tab] keys (to move backward) or the cursor select ([◄] [►] [▲] [▼]) keys. Or, if you have the HP Touch accessory, you can touch the appropriate place on the screen.

Whenever the instruction "press" is used alone, it means the key on the keyboard has no corresponding screen label ([Return] and [Reset Break], for example), and you must press the key even if you have the HP Touch accessory.

For more information on how to use the two input devices, see the chapter entitled Introducing the HP Touchscreen II in *Using Your HP Touchscreen II*.

Using MAKE WORKDISC

You need to copy the operating system and the applications on the System Master Disc onto your fixed disc. Use the application MAKE WORKDISC on the P.A.M. Main menu to do this.

MAKE WORKDISC performs three major functions: it **formats and copies the operating system** onto a new disc, **installs (copies) the System Master Applications** on the new disc, and **copies the MS-DOS utility commands** to the new disc in one process.

Note

If you have an HP 9133H disc drive that has been formatted and has files on it that you want to save, refer to Appendix E, Using UPDATE SYSTEM and UPDATE APPS, and follow the instructions given.

Before You Begin

Before you use MAKE WORKDISC, you should know the following:

- Formatting is the first function of MAKE WORKDISC. Formatting is a process that prepares a new disc to receive data. The MAKE WORKDISC application formats your new fixed disc, and copies the operating system as part of the formatting process. You do not use the FORMAT application on the P.A.M. Main menu to format your fixed disc before running MAKE WORKDISC.
- Installing all the System Master Applications is the second function of MAKE WORKDISC. Installing is the process of copying an application from a Master disc to a work disc. This is a list of the System Master applications that MAKE WORKDISC installs:

- MS-DOS COMMANDS
- FORMAT
- DEVICE CONFIG
- EASY CONFIG
- COPY/BACKUP
- INSTALL
- SET UP P.A.M.
- SAVERAM
- STORE CONFIG

MAKE WORKDISC does not install MAKE WORKDISC, UPDATE SYSTEM, or UPDATE APPS.

- Copying the MS-DOS utilities is the third function of MAKE WORKDISC.

Copying Your System Master Disc Onto Your Fixed Disc

To use MAKE WORKDISC to copy your System Master to your fixed disc, perform the following steps:

1. Start with your System Master Disc in drive A.
2. Start at the P.A.M. Main menu and find the box labeled MAKE WORKDISC. Touch the application box on the display, or [Tab] over to the box, until it is highlighted.
3. Touch Start Applic or press [f1] to start the MAKE WORKDISC application.
4. The computer takes a few seconds to load the application. You see this on the screen:

   ```
   Loading MAKE WORKDISC
   ```

Then, you will see this:

```
A>ECHO OFF
*** Installation will be from disc "A:" to disc
"B:".
*** If this is NOT correct, hold down [CTRL] and
press "C".
*** If this IS correct, press any alphanumeric key
to continue.
Strike a key when ready . . .
```

5. Press Return.

   If you do not wish to continue, hold down the CTRL key and press C, and the P.A.M. Main menu will reappear.

6. When you press a key to continue the MAKE WORKDISC process, the application proceeds to format, install and copy from the System Master Disc to the new fixed disc. The MAKE WORKDISC procedure takes approximately 25 minutes to complete.

What You see on the Screen

During MAKE WORKDISC, you see on the screen the names of the files that are being installed in each application. You see the names and version numbers of the applications being installed, and the amount of space remaining on the fixed disc throughout the procedure. You will see `Install Completed` on your screen after each application is installed.

When MAKE WORKDISC is complete, the P.A.M. Main menu reappears. The fixed disc now has the files it needs from the System Master Disc. You can now operate your system from the fixed disc. Remove your System Master Disc from drive A and put it away in a safe place.

Turn OFF power to your Touchscreen II and disc drive.

Changing the Address of Your Fixed Disc Drive

You will have to make some changes so that the operating system is loaded automatically when you turn the computer on. First, you must change the address of the fixed disc. Turn OFF the display unit.

1. Turn your disc drive OFF. (The button marked LINE should be OUT.)
2. Turn your system around so that the back of your disc drive and display unit faces you.
3. Turn the address wheel on the back of the disc drive so that the address is 0.

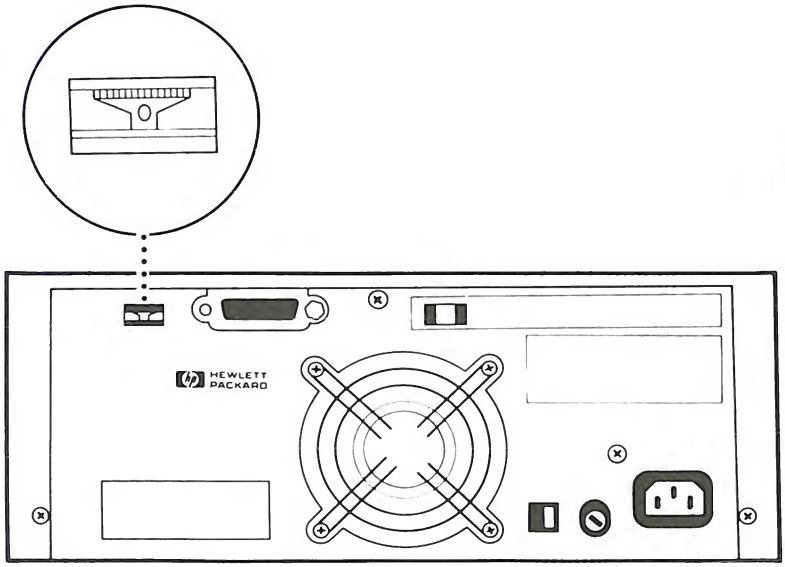

Figure 5-15. The HP 9133H Address Wheel Set at 0

4. Turn your display unit and disc drive around so that the front is facing you.

Configuring the Fixed Disc Drive and Other Devices

Your next step is to configure the HP 9133H. Every time you connect a device to your computer, you must configure it. Configuring a device gives the computer certain important information which it must have so that the device and the computer can communicate.

Now that you have used MAKE WORKDISC to format your fixed disc and copy the operating system onto it, you must configure your disc drive.

You will only have to configure your disc drive(s) once, unless you add new drives later. If you have printers, plotters, a modem, or other devices, you should configure them now also. You need to configure all these devices to let the Touchscreen II know where they are.

When you have finished configuring your system, you must then make some changes to your system. Go to Appendix B now to find out how to configure your entire HP Touchscreen II Personal Computer system. Then return to the next section to rename your disc drive. You may want to make a note of the page numbers.

Renaming Your Disc Drive

Once you have changed the address of your fixed disc, and configured your system, your fixed disc becomes the A disc drive.

Place the A sticker on the front of the fixed-disc drive and the B sticker on the front of the flexible-disc drive.

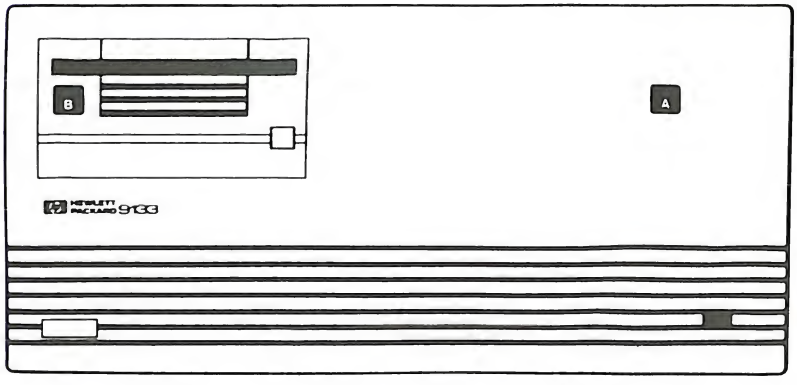

Change labels of disc drives only AFTER configuring.

Figure 5-16. The HP 9133H With Disc Drives Identified

Now you are ready to install applications onto your disc drive.

Installing Applications Onto Your Fixed Disc

An application is a program that performs a special function. When you order an application, such as WordStar, or VisiCalc, you should receive one set of master discs. To make these applications easier to use, you will want to install them onto your fixed disc, using the Install application.

You should install all of your applications onto your fixed disc as soon as possible. You should then store the master discs in a safe place.

You can install your applications onto your fixed disc as soon as you have run the Make WorkDisc application, which formatted your fixed disc and installed the System Master Disc applications onto it. The Install application allows you to make usable copies of your applications. (You cannot make a usable copy of an application using the Copy/Backup application. The Copy/Backup application is used for other purposes.)

Turn now to Chapter 9, Installing Applications and Using Set Up P.A.M., in *Using Your HP Touchscreen II*, and follow the instructions. When you are finished, return to the next section in this manual, entitled Final Steps.

Final Steps

1. Replace the covers on the display unit.
2. Check that you have:
   - set up the display unit and connected the keyboard.
   - conducted the power-on self-test for the display unit.
   - connected and labeled the disc drive(s).
   - connected the printer(s) and/or plotter(s), and conducted the self-test(s).
   - started up the computer.
   - run MAKE WORKDISC.
   - configured the system.
   - installed applications.

If you have done everything on the list, congratulate yourself! You are now ready to begin using your HP Touchscreen II personal computer. You could begin a work session and, for example, use the WordStar application to do word processing. Information on starting a work session, working with P.A.M. (Personal Applications Manager), and much more can be found in the *Using Your HP Touchscreen II Personal Computer* manual, which came with your computer. To begin using an application, please refer to the instructions that came with it.

Appendix A

Connecting HP Printers and Plotters

A-2 What You Need to Install Printers and Plotters
A-3 Cable Connections to Your Touchscreen II
A-5 Connecting Your HP 2225A ThinkJet Printer
A-10 Connecting Your HP 2225D ThinkJet Printer
A-13 Connecting Your HP 2227A QuietJet Plus Printer
A-17 Connecting Your HP 2603A Daisywheel Printer
A-20 Connecting Your HP 2686A LaserJet Printer
A-23 Connecting Your HP 2686 LaserJet Plus Printers
A-26 Connecting Your HP 7440A ColorPro Graphics Plotter
A-33 Connecting Your HP 7475A Graphics Plotter
A-40 Finishing Up
A-40 Where to Go from Here

A Connecting HP Printers and Plotters

This appendix gives you the master plan for setting up your HP printer or plotter and connecting it to your Touchscreen II. This master plan coordinates the instructions outlined in your printer or plotter owner's manual with the additional steps required to connect your printer or plotter to your Touchscreen II. (Remember that you should refer to your printer or plotter owner's manual when you want information about your device's features or how it works.)

The specific printers and plotters that are covered in this appendix are:

- HP 2225A ThinkJet Printer
- HP 2225D ThinkJet Printer
- HP 2227A QuietJet Plus Printer
- HP 2603A Daisywheel Printer
- HP 2686A LaserJet Printer
- HP 2686 LaserJet Plus Printers
- HP 7440A ColorPro Graphics Plotter (eight-pen)
- HP 7475A Graphics Plotter (six-pen)

If the printer or plotter that you want to install is not listed here, refer to the appendix in *Using Your HP Touchscreen II* entitled More HP Printers and Plotters.

Note This appendix describes how you connect a maximum of two printers and one plotter. If you have more devices than this, you need to refer to your printer and plotter manuals for instructions on how to connect them.

What You Need to Install Printers and Plotters

To install and connect your printer or plotter, you will need these items:

- The printer or plotter that you want to install, including the paper and plotting pens that come with it.
- The printer or plotter owner's manual(s). It gives you specific information about the device's features and how it works.
- An RS-232-C or an HP-IB cable. (The section in this appendix entitled Cable Connections to Your Touchscreen II tells you how to make sure that you have the right cable.)
- A small flat-blade screwdriver (for an RS-232-C cable).

Cable Connections to Your Touchscreen II

Printers and plotters can be connected to your Touchscreen II using several kinds of cables. The two most commonly used cables and the ones that are covered in this appendix are the HP-IB and the RS-232-C.

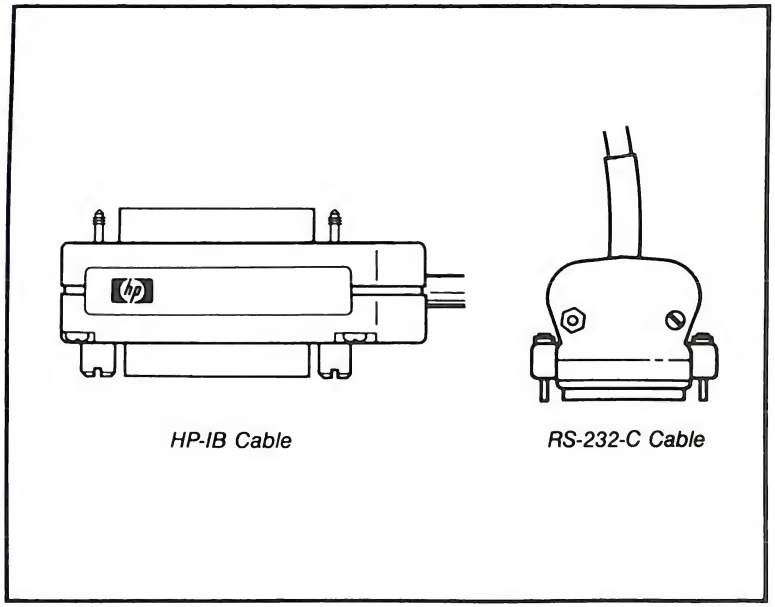

Figure A-1. HP-IB and RS-232-C Cable Ends

There are many RS-232-C cables, but you **must** use HP Part 13242G to connect HP printers and plotters.

Note

If you're using some other cable connection, you should consult your printer or plotter manual for information on how to connect the device to your Touchscreen II.

The chart below lists the Hewlett-Packard printers and plotters that are covered in this appendix along with the cable(s) they use. Find your printer or plotter in this list and ensure that you're using the right cable.

Printer or Plotter	Cable Connection to Your Touchscreen II
HP 2225A ThinkJet Printer	HP-IB
HP 2225D ThinkJet Printer	RS-232-C
HP 2227A QuietJet Plus Printer	RS-232-C
HP 2603A Daisywheel Printer	RS-232-C
HP 2686A LaserJet Printer	RS-232-C
HP 2686 LaserJet Plus Printer	RS-232-C
HP 7440A ColorPro Graphics Plotter (eight-pen)	RS-232-C or HP-IB
HP 7475A Graphics Plotter (six-pen)	RS-232-C or HP-IB

Note If you have two printers, or a printer and a plotter, you can connect one device using an RS-232-C cable and the other device using an HP-IB cable; or you can connect both devices using HP-IB cables.

If you connect a second printer using an HP-IB cable, you must consult the printer owner's manual for the specific switch settings. (For example, the address for a secondary printer is usually 6.)

Now you're ready to connect your printer(s) and/or plotter. Go to the appropriate section and follow the instructions.

Connecting Your HP 2225A ThinkJet Printer

Follow these steps to install your HP 2225A ThinkJet printer:

1. Make sure that the power switches on both your printer and Touchscreen II are turned OFF.
2. Use the instructions in the *HP 2225A ThinkJet Reference Manual* for loading the print cartridge and absorber.
3. Load your paper according to the instructions in the *HP 2225A ThinkJet Reference Manual*.
4. Make sure that you have an HP-IB cable. (See the illustration in the section entitled Cable Connections to Your Touchscreen II in this appendix.)
5. Use the tip of a ballpoint pen to set the address switches at the back of your printer as shown below.

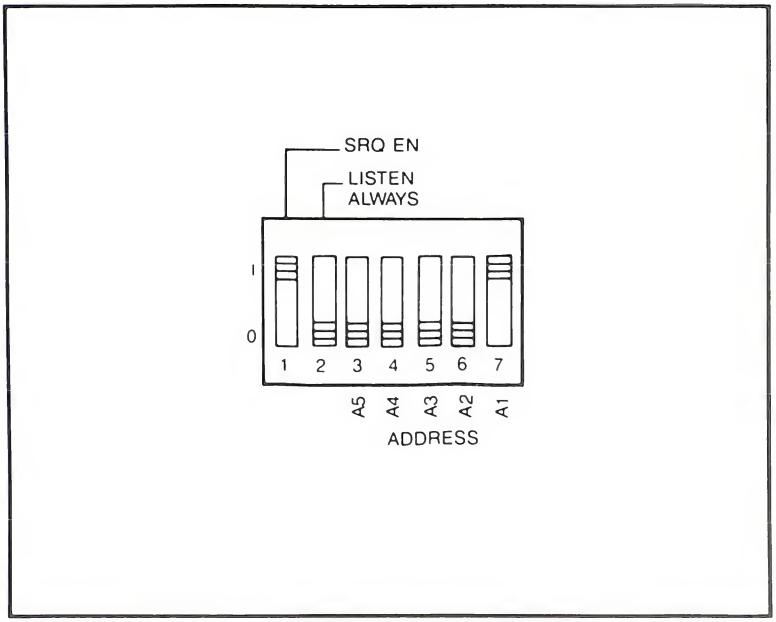

Figure A-2. HP 2225A Switch Settings

6. Plug the HP-IB cable into the HP-IB port on the back of the printer as shown below.

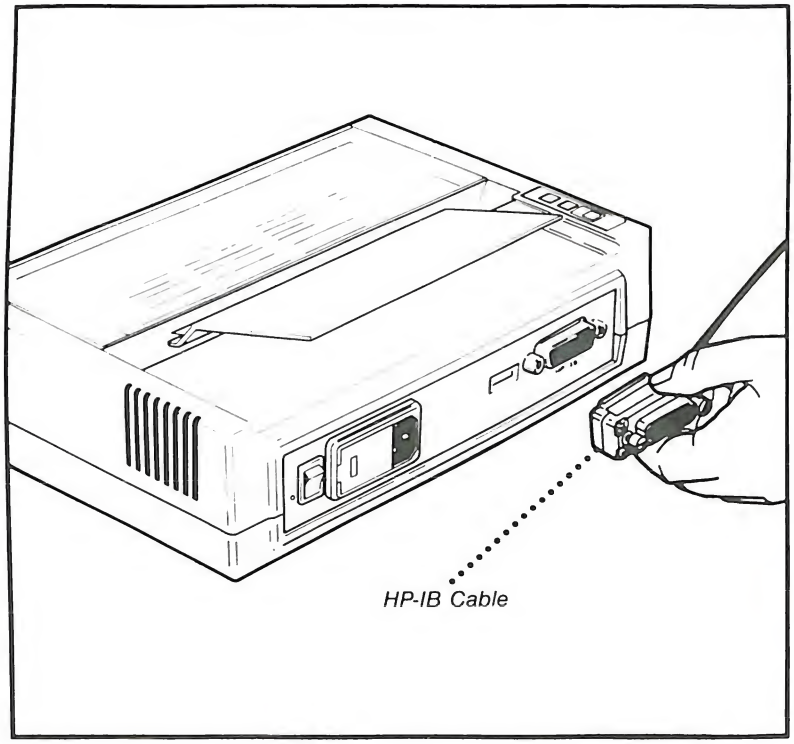

Figure A-3. HP 2225A Cabled with HP-IB

7. Now piggyback the other end of the HP-IB cable to the back of your display unit as shown below. Tighten the screws on both HP-IB connectors with your fingers.

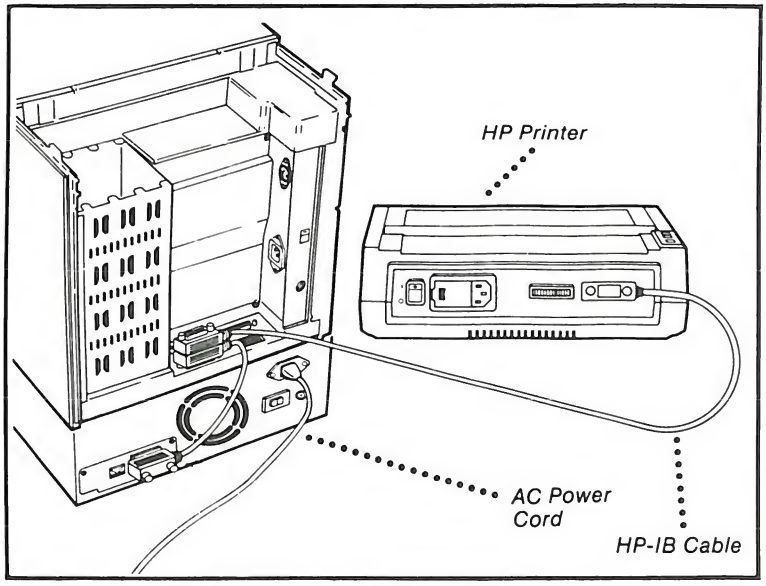

Figure A-4. Back of Touchscreen II with HP-IB Cabling

If you already have another device, such as a plotter, connected to your display unit, piggyback the printer cable to the plotter cable as shown below.

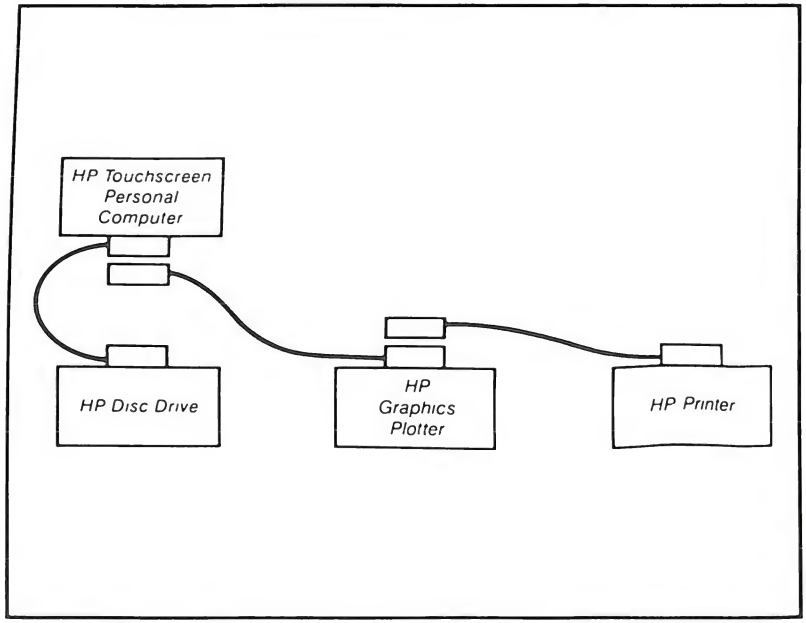

Figure A-5. Piggybacking HP-IB Cables

8. Plug the power cord into the printer and then into the wall outlet.

9. Perform the printer's self-test using the instructions in the section of your *HP 2225A ThinkJet Reference Manual* entitled Printing Self Test.

Note

It is very important that you perform the self-test and that it finishes successfully. The purpose of the self-test is to ensure that your printer is working properly before you try to use it with your Touchscreen II.

If Something Went Wrong

If the self-test doesn't work, check that:

- The printer is ON.
- The printer is plugged in.
- The wall outlet is working. To check this, plug a lamp into the outlet.
- The fuse is installed properly.
- The print cartridge has ink in it.
- The paper is inserted properly.

If these items do not help you to resolve the problem, study the troubleshooting section in your *HP 2225A ThinkJet Reference Manual*. If you're still unable to correct the problem, call the person from whom you bought your Touchscreen II. You can also refer to the section entitled "Answers to Your Questions" in the Current Information section of the *HP PC Communicator*. A recent copy is included with your Touchscreen II.

10. Turn your ThinkJet printer OFF.
11. If you have another printer or plotter to connect to your Touchscreen II, turn to that section in this appendix (or to the appendix entitled More HP Printers and Plotters in *Using Your HP Touchscreen II)* and follow the instructions there.

    If you have no more printers or plotters to connect, turn to the section entitled Where to Go From Here on the last page of this appendix.

Connecting Your HP 2225D ThinkJet Printer

Follow these steps to connect your HP 2225D ThinkJet printer:

1. Make sure that the power switches on both your printer and Touchscreen II are turned OFF.
2. Use the instructions in the *HP 2225D ThinkJet Reference Manual* for loading the print cartridge and absorber.
3. Load your paper according to the instructions in the *HP 2225D ThinkJet Reference Manual*.
4. Make sure that you have an RS-232-C cable. (See the section entitled Cable Connections to Your Touchscreen II in this appendix.)
5. Use the tip of a ballpoint pen to set the switches at the rear panel of your printer as shown below.

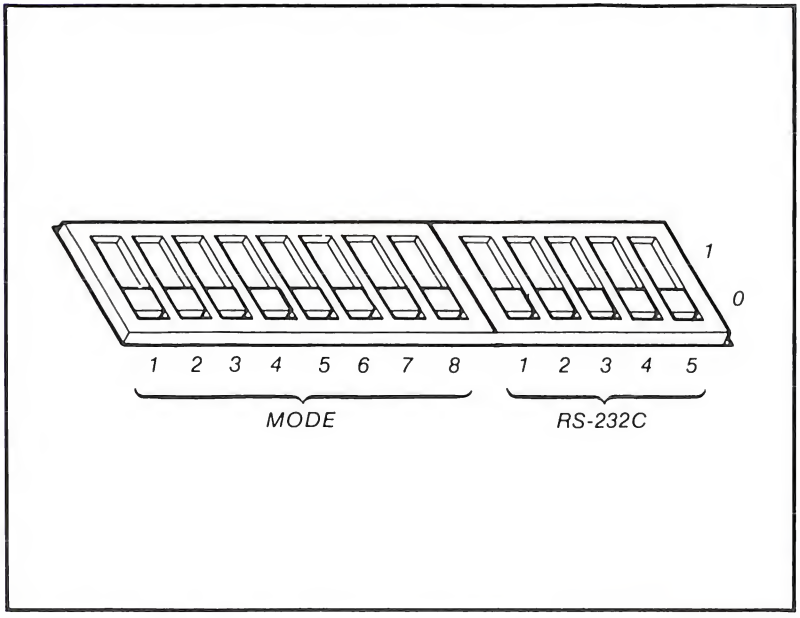

Figure A-6. HP 2225D Switch Settings

6. Attach the RS-232-C cable to your printer and to Port 2 at the back of your Touchscreen II as shown here. Use a small flat-blade screwdriver to tighten the screws on both RS-232-C connectors.

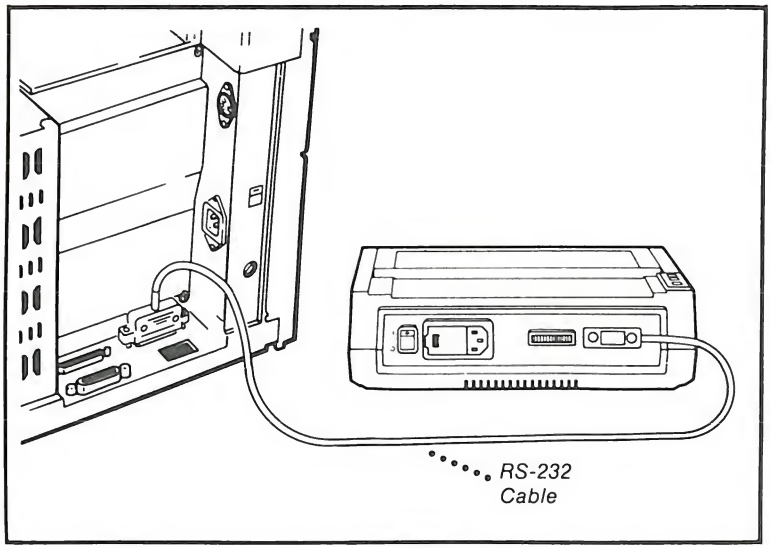

Figure A-7. HP 2225D Cabled to the Touchscreen II

7. Plug the power cord into the printer and then into the wall outlet.
8. Perform the printer's self-test by using the instructions in the section of your *HP 2225D ThinkJet Reference Manual* entitled Printing Self Test.

Note It is very important that you perform the self-test and that it finishes successfully. The purpose of the self-test is to ensure that your printer is working properly before you try to use it with your Touchscreen II.

If Something Went Wrong

If the self-test doesn't work, check that:

- The printer is ON.
- The printer is plugged in.
- The wall outlet is working. To check this, plug a lamp into the outlet.
- The printer's fuse is installed properly.
- The print cartridge has ink in it.
- The paper is inserted properly.

If these items do not help you to resolve the problem, study the troubleshooting section in your *HP 2225D ThinkJet Reference Manual*. If you're still unable to correct the problem, call the person from whom you bought your Touchscreen II. You can also refer to the section entitled "Answers to Your Questions" in the Current Information section of the *HP PC Communicator*. A recent copy is included with your Touchscreen II.

9. Turn OFF your ThinkJet printer.
10. If you have another printer or plotter to connect to your Touchscreen II, turn to that section in this appendix (or to the appendix entitled More HP Printers and Plotters in *Using Your HP Touchscreen II*) and follow the instructions there.

    If you have no more printers or plotters to connect, turn to the section entitled Where to Go From Here on the last page of this appendix.

Connecting Your HP 2227A QuietJet Plus Printer

Follow these steps to install your HP 2227A printer:

1. Make sure that the power switches on both your printer and Touchscreen II are turned OFF.
2. Use the instructions in the *HP 2227A QuietJet Plus Printer Owner's Manual* for loading the print cartridge.
3. Load your paper according to the instructions in the *HP 2227A QuietJet Plus Printer Owner's Manual.*
4. Make sure that you have an RS-232-C cable. (See the section entitled Cable Connections to Your Touchscreen II in this appendix.)
5. Use the tip of a ballpoint pen to set the switches inside the front panel of your printer as shown below.

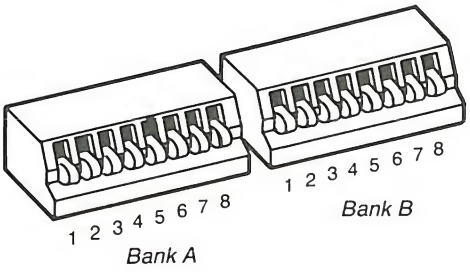

Figure A-8. HP 2227A Switch Settings

6. Connect one end of the RS-232-C cable to the RS-232-C port on the back of the printer, and the other end to Port 2 the back of your display unit, as shown here. Use a small flat-blade screwdriver to tighten the screws on both RS-232-C connectors.

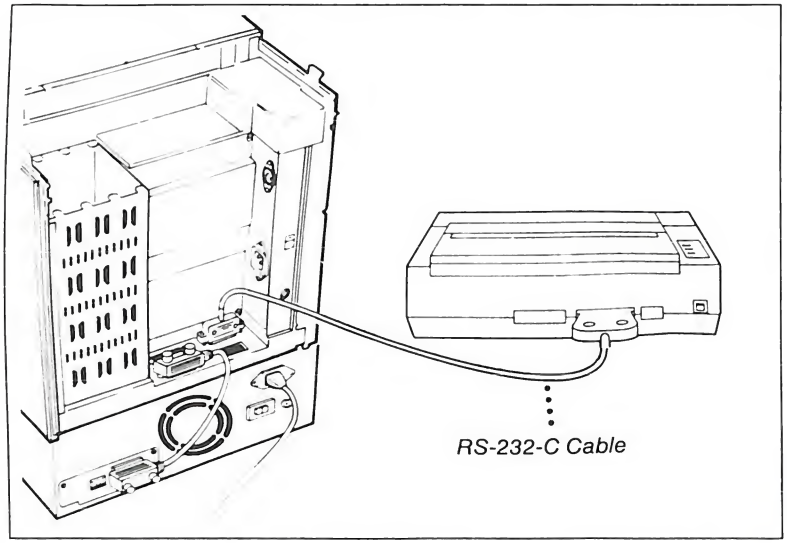

Figure A-9. HP 2227A Cabled with RS-232-C Cable

7. Plug the power cord into the printer and then into a wall outlet.

8. Perform the printer's self-test using the instructions in the section of your *HP 2227A QuietJet Printer Owner's Manual* entitled "Getting Started."

Note

It is very important that you perform the self-test and that it finishes successfully. The purpose of the self-test is to ensure that your printer is working properly before you try to use it with your Touchscreen II.

If Something Went Wrong

If the self-test doesn't work, check to make sure that:

- The printer is turned ON.
- The printer is plugged in.
- The wall outlet is working. (To check this, plug a lamp into the outlet.)
- You're starting the self-test properly.
- The function switches inside the front cover are set properly.

If these procedures do not work, review your *HP 2227A QuietJet Printer Owner's Manual* to ensure that you performed the self-test properly. If the printer still cannot perform the self-test, call the person from whom you bought your Touchscreen II. You can also refer to the section entitled "Answers to Your Questions" in the Current Information section of the *HP PC Communicator.* A recent copy is included with your Touchscreen II.

---

9. Turn OFF your QuietJet Printer.
10. If you have another printer or plotter to connect to your Touchscreen II, turn to that section in this appendix (or to the section entitled More Printers and Plotters in *Using Your HP Touchscreen II)* and follow the instructions there.

If you have no more printers or plotters to connect, turn to the section entitled Where to Go From Here on the last page of this appendix.

Connecting Your HP 2603A Daisywheel Printer

Follow these instructions to connect your HP 2603A Daisywheel Printer:

1. Make sure that the power switches on both your printer and the Touchscreen II are turned OFF.
2. Use the instructions in the *HP 2603A Daisywheel Printer Owner's Manual* to install the daisywheel and the ribbon cartridge, and load paper.
3. Make sure that you have an RS-232-C cable. (See the section entitled Cable Connections to Your Touchscreen II in this appendix.)
4. Press and push down on the switch cover on the lower left rear of the printer to expose the configuration switches. Use the tip of a ballpoint pen to set the switches as shown below. Replace the configuration switch cover.

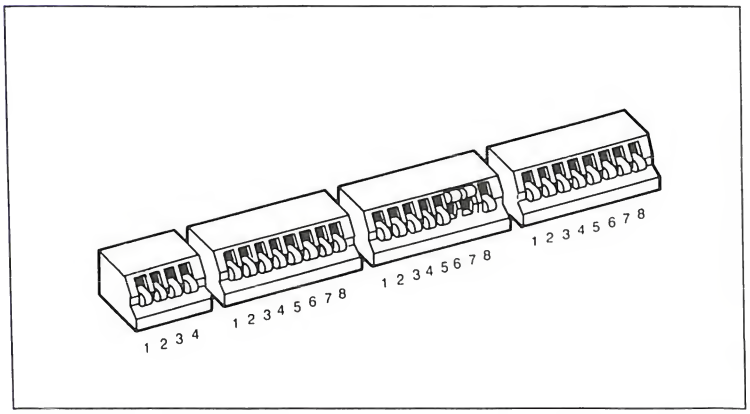

Figure A-10. HP 2603A Switch Settings

5. Attach one end of the RS-232-C cable to your printer and the other end to Port 2 at the back of your Touchscreen II, as shown here. Use a small flat-blade screwdriver to tighten the screws on both the RS-232-C connectors.

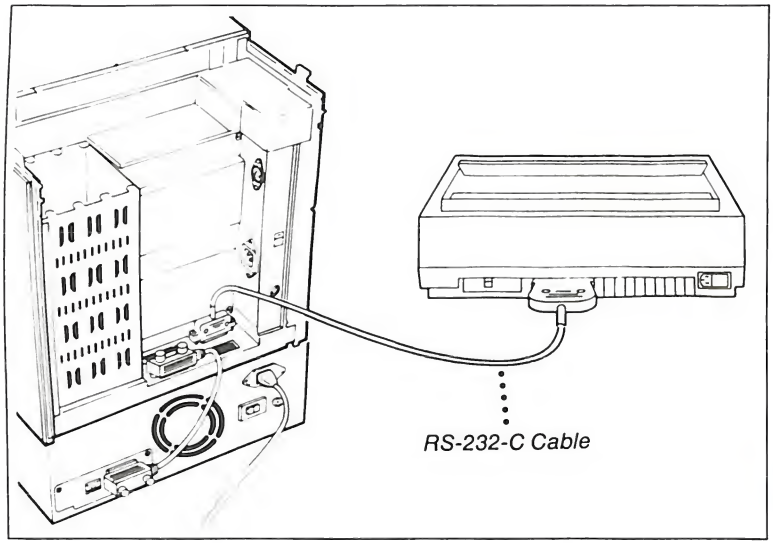

Figure A-11. HP 2603A Cabled to Touchscreen II

6. Plug the power cord into the printer and then into the wall outlet.
7. Perform the printer's self-test by using the self-test instructions in the Getting Started section of your *HP 2603A Daisywheel Printer Reference Section Owner's Manual*.

Note It is very important that you perform the self-test and that it finishes successfully. The purpose of the self-test is to ensure that your printer is working properly before you try to use it with your Touchscreen II.

If Something Went Wrong

If the self-test doesn't work, check that:

- The printer is plugged in.
- The printer is turned ON.
- The wall outlet is working. To check this, plug a lamp into the outlet.
- The daisywheel and ribbon cartridge are installed properly.
- The paper is installed properly.

If these items do not help you to resolve the problem, study the troubleshooting section in your *HP 2603A Daisywheel Printer Owner's Manual.* If you're still unable to correct the problem, call the person from whom you bought your Touchscreen II. You can also refer to the section entitled "Answers to Your Questions" in the Current Information section of the *HP PC Communicator.* A recent copy is included with your Touchscreen II.

8. Turn OFF your 2603A Daisywheel Printer.
9. If you have another printer or plotter to connect to your Touchscreen II, turn to that section in this appendix (or to the appendix entitled More HP Printers and Plotters in *Using Your HP Touchscreen II Personal Computer)* and follow the instructions there.

If you have no more printers or plotters to connect, turn to the section entitled Where to Go From Here on the last page of this appendix.

Connecting Your HP 2686A LaserJet Printer

To connect your LaserJet printer, follow these steps:

1. Make sure that the power switches on your printer and your Touchscreen II are turned OFF.
2. Use the instructions in your *LaserJet Printer Owner's Manual* entitled Unpacking and Inspection and Printer Set-Up to check your printer and get it ready to attach to your Touchscreen II.
3. Make sure that you have an RS-232-C cable. (See the section entitled Cable Connections to Your Touchscreen II in this appendix.)
4. Attach the RS-232-C cable to your printer and to Port 2 at the back of your Touchscreen II as shown below. Use a small flat-blade screwdriver to tighten the screws on both RS-232-C connectors.

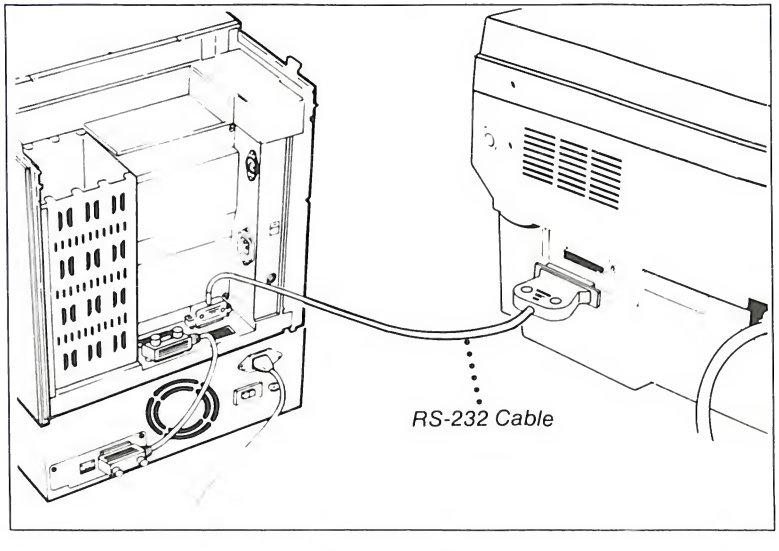

Figure A-12. HP 2686A Cabled to the Touchscreen II

5. If your LaserJet comes with a detachable power cord, plug it into the printer, then plug the other end into the wall outlet.
6. Perform the printer's self-test using the instructions in the section of your *LaserJet Printer Owner's Manual* entitled Confirming Proper Operation.

Note It is very important that you perform the self-test and that it finishes successfully. The purpose of the self-test is to ensure that your printer is working properly before you try to use it with your Touchscreen II.

If Something Went Wrong

If the self-test doesn't work, check to make sure that:

- The printer is plugged in.
- The wall outlet works. (To check this, plug a lamp into the outlet.)
- The paper cassette is loaded properly.
- The upper main body of the printer is closed properly.

If these items do not help you to resolve the problem, study the section in your *LaserJet Printer Owner's Manual* entitled In Case of Difficulty. If you're still unable to correct the problem, call the person from whom you bought your Touchscreen II. You can also refer to the section entitled "Answers to Your Questions" in the Current Information section of the *HP PC Communicator.* A recent copy is included with your Touchscreen II.

7. Turn OFF your LaserJet printer.
8. If you have another printer or plotter to connect to your Touchscreen II, turn to that section in this appendix (or to the appendix entitled More HP Printers and Plotters in *Using Your HP Touchscreen II)* and follow the instructions there.

   If you have no more printers or plotters to connect, turn to the section entitled Where to Go From Here on the last page of this appendix.

Connecting Your HP 2686 LaserJet Plus Printers

To connect your LaserJet Plus, LaserJet Plus Option 300, or LaserJet 500 Plus printer, follow these steps:

1. Follow the instructions in Chapter 2 of your LaserJet Plus printer operator's reference manual to unpack, inspect, set up, and check your printer to get it ready to attach to your Touchscreen II.
2. Make sure that the power switches on your printer and your Touchscreen II are turned OFF.
3. Make sure that you have an RS-232-C cable. (See the section entitled Cable Connections to Your Touchscreen II in this appendix.)
4. Make sure that the wire bail on the side of the printer is in the UP position, covering the parallel (upper) connector, as shown below.

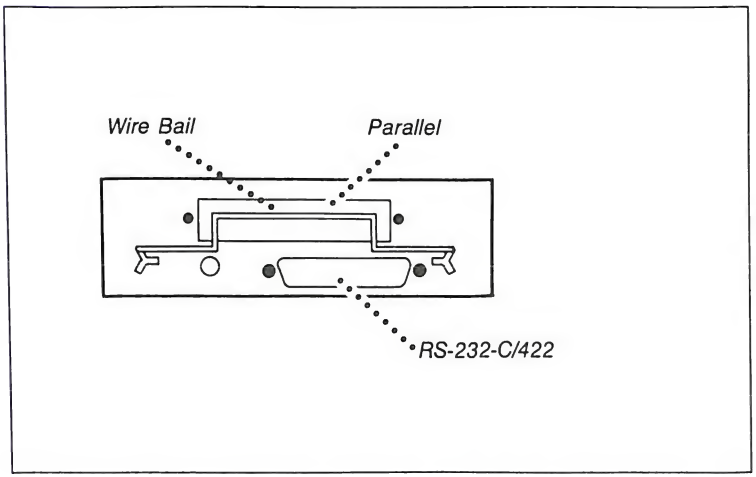

Figure A-13. HP LaserJet Plus Interface Connector

5. Attach the RS-232-C cable to the RS-232-C (lower) connector on your printer and to Port 2 at the back of your Touchscreen II, as shown below. Use a small flat-blade screwdriver to tighten the screws on both RS-232-C connectors.

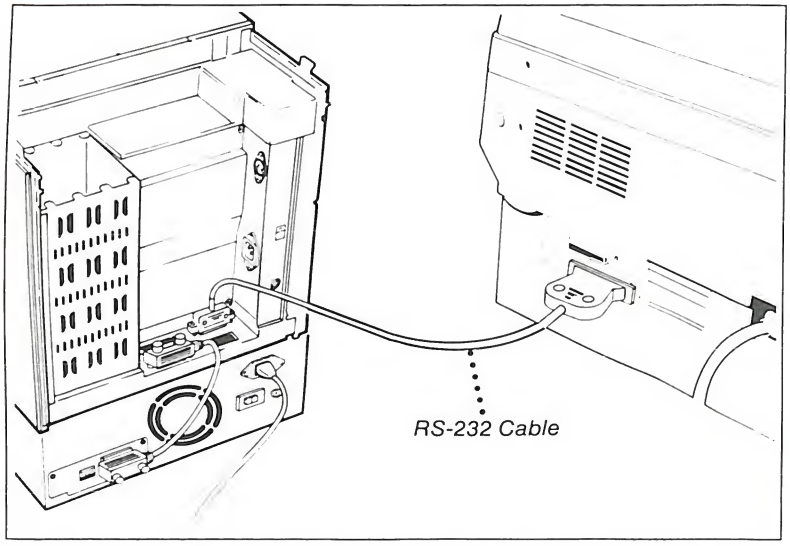

Figure A-14. HP LaserJet Plus Cabled to the Touchscreen II

6. If your LaserJet Plus comes with a detachable power cord, plug it into the printer. Plug the other end into the wall outlet and turn ON the printer.
7. Perform the printer's self-test, using the instructions in the chapter of your LaserJet Plus printer operator's reference manual entitled Getting Your Printer Ready for Operation.

Note

It is very important that you perform the self-test and that it finishes successfully. The purpose of the self-test is to ensure that your printer is working properly before you try to use it with your Touchscreen II.

If Something Went Wrong

If the self-test doesn't work, check to make sure that:

- The printer is plugged in.
- The wall outlet works. (To check this, plug a lamp into the outlet.)
- The paper cassette is loaded properly.
- The upper main body of the printer is closed properly.

If these procedures do not help you to resolve the problem, study the section in your LaserJet Plus printer operator's reference manual entitled In Case of Difficulty, which is located in the chapter entitled Maintenance and Troubleshooting. If you're still unable to correct the problem, call the person from whom you bought your Touchscreen II. You can also refer to the section entitled "Answers to Your Questions" in the Current Information section of the *HP PC Communicator.* A recent copy is included with your Touchscreen II.

8. Turn OFF your LaserJet Plus printer.
9. If you have another printer or plotter to connect to your Touchscreen II, turn to that section in this appendix (or to the appendix entitled More HP Printers and Plotters in *Using Your HP Touchscreen II Personal Computer)* and follow the instructions there.

If you have no more printers or plotters to connect, turn to the section entitled Where to Go From Here on the last page of this appendix.

Connecting Your HP 7440A ColorPro Plotter

Follow the instructions in your *HP 7440A ColorPro Graphics Plotter Operating Manual* for inspecting your plotter. Then perform these steps:

1. Be sure that the power switches on your plotter and on your Touchscreen II are turned OFF.
2. See Figure A-1 in this appendix to determine whether you have an HP-IB or an RS-232-C cable.
3. Use the tip of a ballpoint pen to set the switches on the rear panel of your plotter.
   a. If you're using an HP-IB cable, set the address switches as shown below.

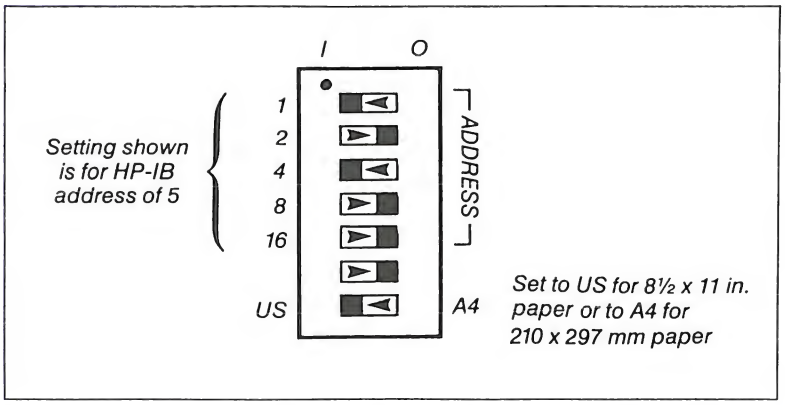

Figure A-15. HP 7440A Switch Settings for HP-IB Cable

b. If you are using an RS-232-C cable, set the switches as shown below.

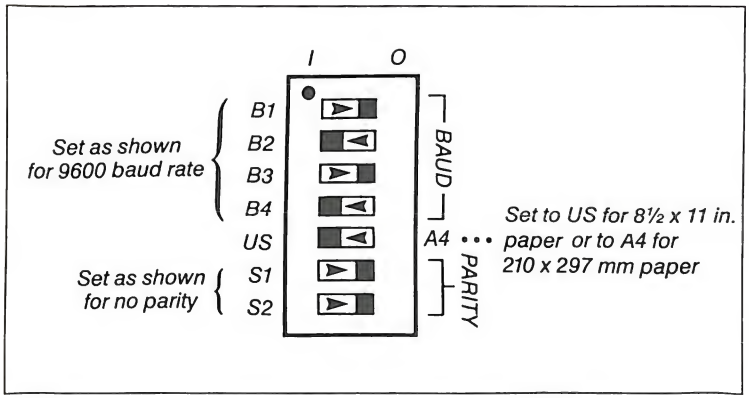

Figure A-16. HP 7440A Switch Settings for RS-232-C Cable

4. Connect the HP-IB or RS-232-C cable to your Touchscreen II as follows:

   a. If you're using an HP-IB cable, plug one end of it into the HP-IB port in the back of the plotter, and "piggyback" the other end of the HP-IB cable to the back of your display unit, as shown below.

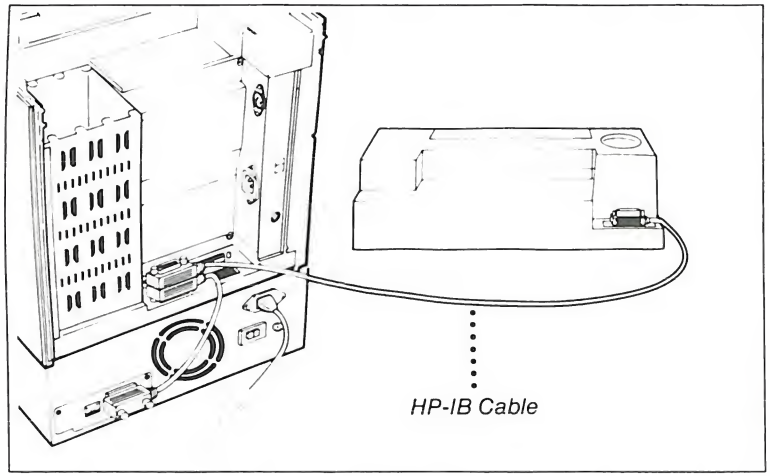

Figure A-17. Back of Touchscreen II with HP-IB Cabling

If you have a printer that is already connected to the HP-IB cable, "piggyback" the plotter cable to the printer, as shown below.

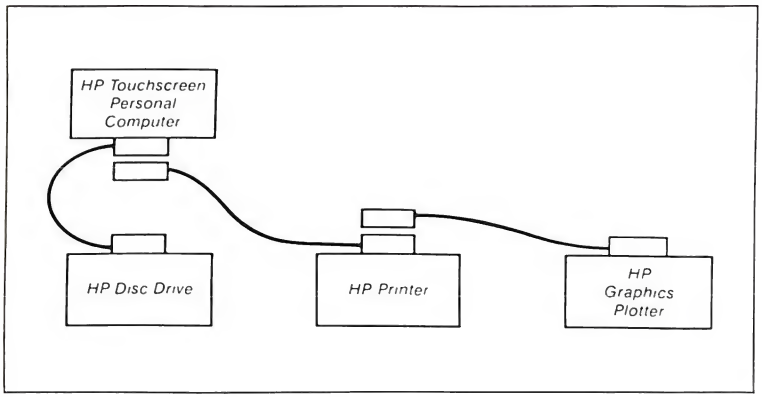

Figure A-18. Piggybacking HP-IB Cables

b. If you're using an RS-232-C cable, connect one end of it to Port 2 at the back of your display, and connect the other end to the RS-232-C port on the back of your plotter, as shown below. Use a small flat-blade screwdriver to tighten the screws on both RS-232-C connectors.

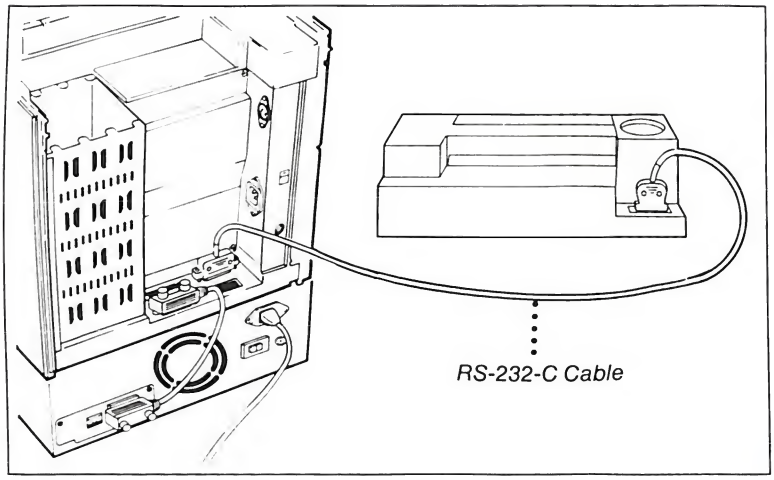

Figure A-19. Back of Touchscreen II with RS-232-C Cabling

5. Plug the power cord into the plotter and then into the wall outlet. Turn ON power to the plotter, using the instructions in the section entitled Setting Up Your Plotter, in your *HP 7440A ColorPro Graphics Plotter Operating Manual*.
6. To load pens and paper, follow the instructions in your *HP 7440A ColorPro Graphics Plotter Operating Manual* for setting up your plotter.

If you have difficulty loading pens or paper, check that:

- The plotter is plugged in.
- The wall outlet is working. (To check this, plug a lamp into the outlet.)

7. Perform the plotter's demonstration plot using the instructions in the section of your *HP 7440A ColorPro Graphics Plotter Operating Manual* entitled Setting Up Your Plotter.

Note

It is very important that you perform the demonstration plot and that it finishes successfully. The purpose of the demonstration plot is to ensure that your plotter is working properly before you try to use it with your Touchscreen II.

If Something Went Wrong

If the demonstration plot doesn't work, check to make sure that:

- You're starting the demonstration plot properly.
- The rear-panel switches are set properly.
- The pens and paper are loaded properly.

If these procedures do not work, review your *HP 7440A ColorPro Graphics Plotter Operating Manual* to ensure that you performed the demonstration plot properly. If the demonstration plot still doesn't work, call the person from whom you bought your Touchscreen II. You can also refer to the section entitled "Answers to Your Questions" in the Current Information section of the *HP PC Communicator.* A recent copy is included with your Touchscreen II.

---

8. Turn OFF your plotter.
9. If you have another printer or plotter to connect to your Touchscreen II, turn to that section in this appendix (or to the appendix entitled More HP Printers and Plotters in *Using Your HP Touchscreen II)* and follow the instructions there.

   If you have no more printers or plotters to connect, turn to the section entitled Where to Go From Here on the last page of this appendix.

Connecting Your HP 7475A Graphics Plotter

Follow the instructions in your *HP 7475A Graphics Plotter Operation and Interconnection Manual* for inspecting your plotter. Then perform these steps:

1. Be sure that the power switches on your plotter and on your Touchscreen II are turned OFF.
2. See Figure A-1 in this appendix to determine whether you're using an HP-IB or an RS-232-C cable.
3. Use the tip of a ballpoint pen to set the switches at the rear panel of your plotter as follows:
   a. If you're using an HP-IB cable, set the address switches as shown here:

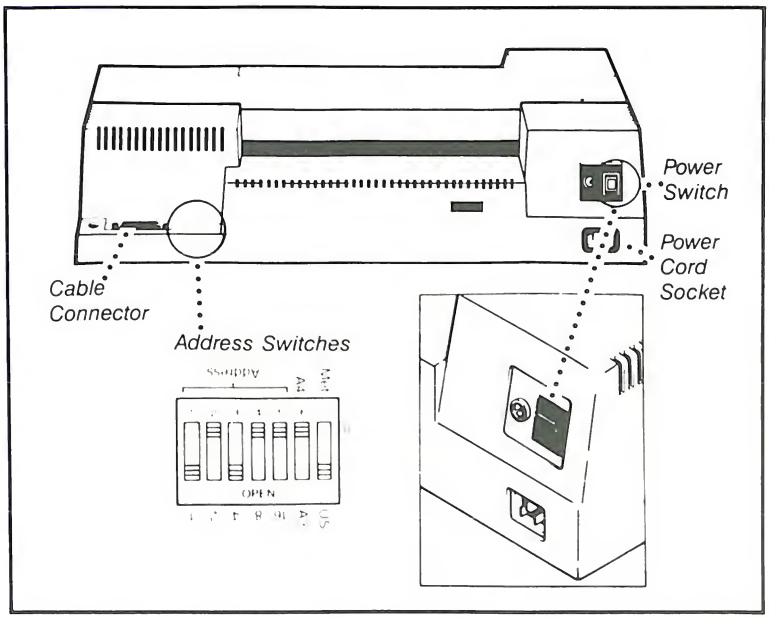

Figure A-20. HP 7475A Switch Settings for HP-IB Cable

b. If you have an RS-232-C cable, set the switches as shown below.

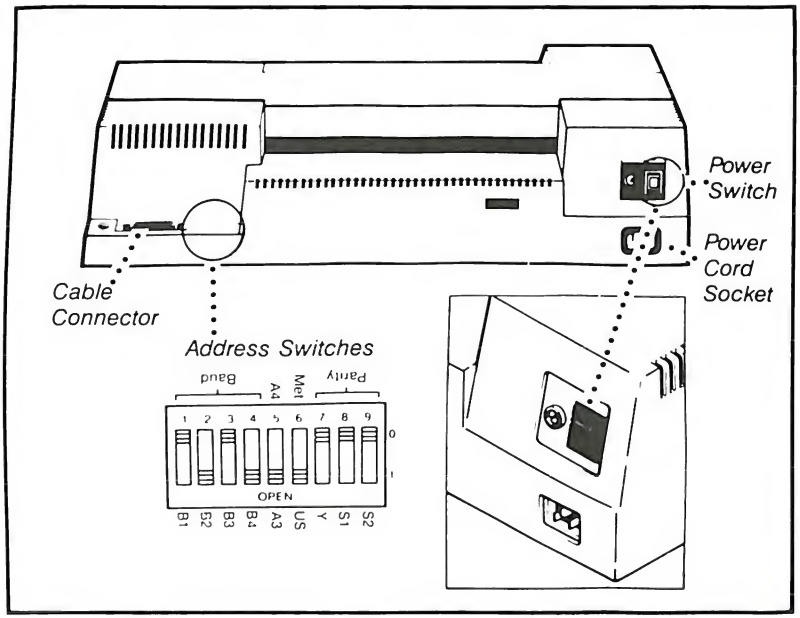

Figure A-21. HP 7475A Switch Settings for RS-232-C Cable

4. Connect the HP-IB or RS-232-C cable to your Touchscreen II as follows:

   a. If you're using an HP-IB cable, plug it into the HP-IB port in the back of the plotter as shown here:

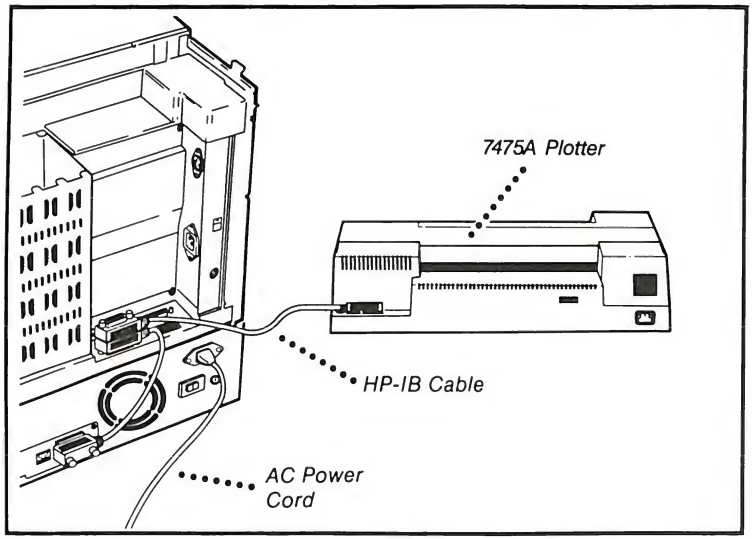

Figure A-22. HP 7475A Cabled with HP-IB

Now piggyback the other end of the HP-IB cable to the back of your display unit as shown below.

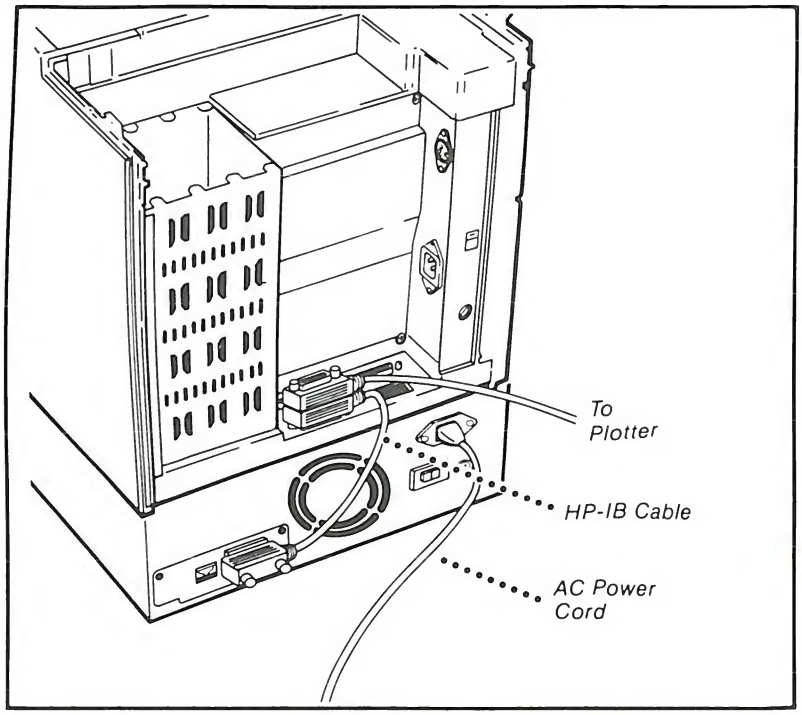

Figure A-23. Back of Touchscreen II with HP-IB Cabling

If you have a printer that is already connected to the HP-IB cable, piggyback the plotter cable to the printer cable as shown below.

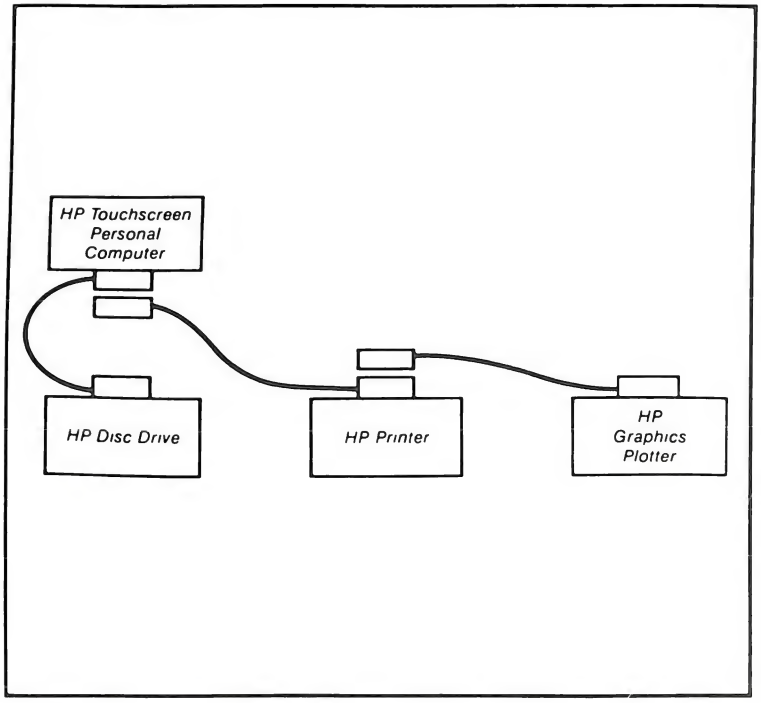

Figure A-24. Piggybacking HP-IB Cables

b. If you're using an RS-232-C cable, connect it to Port 2 at the back of your display as shown below. Use a small flat-blade screwdriver to tighten the screws on both RS-232-C connectors.

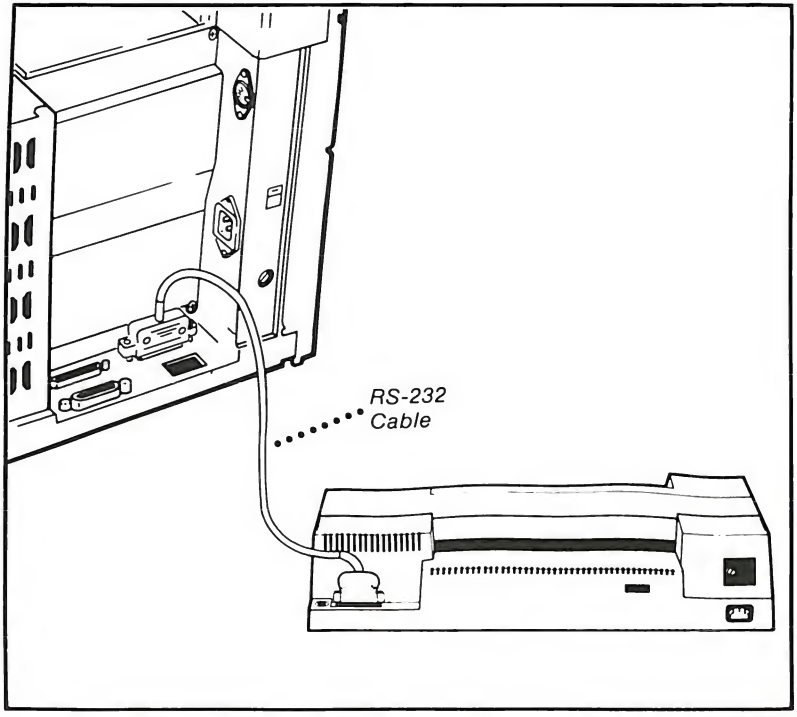

Figure A-25. HP 7475A Attached to Touchscreen II via RS-232-C Cable

5. Plug the power cord into the plotter and then into the wall outlet.
6. To load pens and paper, follow the instructions in your *HP 7475A Graphics Plotter Operation and Interconnection Manual* for setting up your plotter. (These instructions are in the last sections of chapter 2.)

If you have difficulty loading pens or paper, check that:

- The plotter is plugged in.
- The wall outlet works. (To check this, plug a lamp into the outlet.)

If you have difficulty loading pens or paper, check that:

- The plotter is plugged in.
- The wall outlet works. (To check this, plug a lamp into the outlet.)

7. Perform the plotter's self-test using the instructions in the section of your *HP 7475A Graphics Plotter Operation and Interconnection Manual* entitled The Demonstration Plot/Confidence Test.

Note

It is very important that you perform the self-test and that it finishes successfully. The purpose of the self-test is to ensure that your plotter is working properly before you try to use it with your Touchscreen II.

If Something Went Wrong

If the self-test doesn't work, check to make sure that:

- You're starting the self-test properly.
- The rear panel switches are set properly. (See step 2 of the self-test section of the plotter manual.)
- The pens and paper are loaded properly.

If these procedures do not work, review your *HP 7475A Graphics Plotter Operation and Interconnection Manual* to ensure that you performed the self-test properly. If you still cannot perform the self-test, call the person from whom you bought your Touchscreen II. You can also refer to the section entitled "Answers to Your Questions" in the Current Information section of

the *HP PC Communicator.* A recent copy is included with your Touchscreen II.

8. Turn OFF your plotter.
9. If you have another printer or plotter to connect to your Touchscreen II, turn to that section in this appendix (or to the appendix entitled More HP Printers and Plotters in *Using Your HP Touchscreen II)* and follow the instructions there.

Finishing Up

Replace the cable covers by fitting the two plastic hooks on each cover into their corresponding notches on the display unit and snapping them into place. (If you intend to continue setting up your Touchscreen II at this time, you may wish to leave the covers off until you are done.)

Where to Go From Here

If you were in the process of installing your HP Touchscreen II, turn to one of the following pages: if you have an HP 9123D or HP 9122D Disc Drive turn to Loading the Operating System in Chapter 4; if you have an HP 9133D or HP 9153 disc drive, turn to Loading the Operating System in Chapter 5.

If you were connecting a new printer or plotter to an already installed Touchscreen II, turn to the appendix in this manual entitled Configuring Your Touchscreen II and follow the instructions there for configuring your printer or plotter.

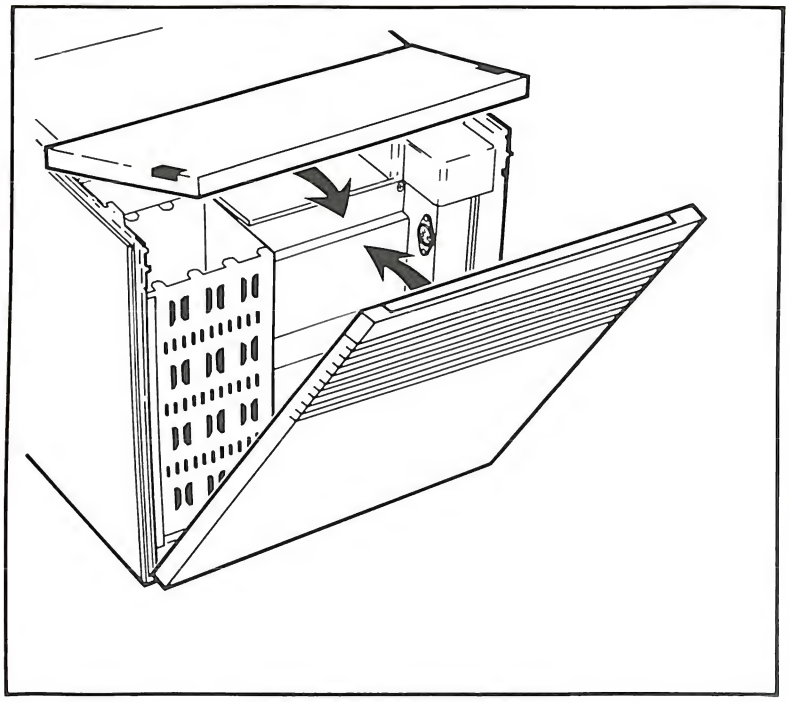

Figure A-26. Replacing the Display Unit Cable Covers

Appendix B

Configuring Your HP Touchscreen II

B-1 Using EASY CONFIG
B-3 Loading EASY CONFIG
B-5 Configuring Disc Drives with EASY CONFIG
B-6 Configuring Your Primary Printer with EASY CONFIG
B-8 Configuring the Rest of Your Devices with EASY CONFIG
B-8 Exiting EASY CONFIG
B-8 Additional Configuring
B-9 Printing From the Keyboard
B-13 Configuring Port 2
B-21 Finishing Configuration

B Configuring Your HP Touchscreen II

This appendix tells you how to configure your HP Touchscreen II computer system—disc drive, printer(s), plotter(s), and auxiliary device(s) such as a modem or accessory card.

You will start by using EASY CONFIG, an application that leads you through the process of configuring a number of devices.

Using EASY CONFIG

The following is a list of the devices for which EASY CONFIG is designed and which are addressed in this appendix.

- one disc drive
- two printers
  - — a primary printer (the one you will use most often)
  - — a secondary printer
- one plotter
- one auxiliary device (such as a modem or accessory card)

Configure all the devices listed above using the instructions in the following sections. If you have more devices than are listed here, you may configure the additional devices using the Device Config menu that is described in the chapter on configuration in the manual entitled *Using Your HP Touchscreen II*. Keep in mind that the devices you configure using EASY CONFIG do not need to be configured twice—use EASY CONFIG to configure the devices listed above and then use Device Config to configure the devices that are not listed above.

EASY CONFIG also has the ability to configure your personal computer as a terminal. This configuration should be done after you have completed all of the steps in this manual. You will find the instructions in the chapter entitled Using Your HP Touchscreen II as a Terminal in the manual entitled *Using Your HP Touchscreen II*.

If you have any difficulty using EASY CONFIG, each screen in EASY CONFIG has a **HELP** function label. Press HELP ([f7]) and a screen will appear that describes the screen you are working with and explains how to configure your peripheral correctly.

Loading EASY CONFIG

To use EASY CONFIG:

1. Turn OFF both the display unit and the disc drive. If you have a 9123D disc drive, make sure your system work disc is in drive A. Turn on both the display unit and the disc drive.
2. Start from the P.A.M. Main menu. You will see boxes on the screen with the names of all the applications that are on either your system work disc or your fixed disc. (If EASY CONFIG is not on the screen, touch `Reread discs` or press [f4].)
3. Touch the box labeled `EASY CONFIG` or press [Tab] until the box is highlighted.

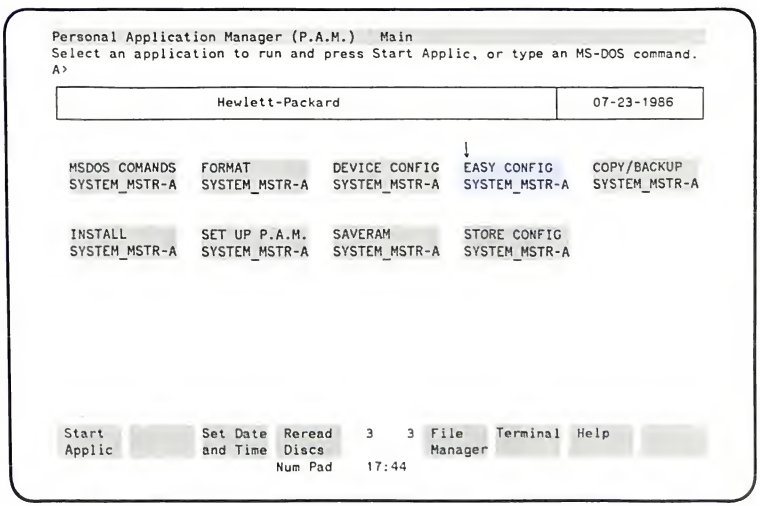

Figure B-1. Choosing EASY CONFIG on the P.A.M. Main Menu

4. Touch `Start Applic` or press [f1]. The message `Loading EASY CONFIG` will appear at the top of the screen for a few seconds. Then the EASY CONFIG Main menu will appear. Note that the menu name—`Main`—appears in the center of the top line.

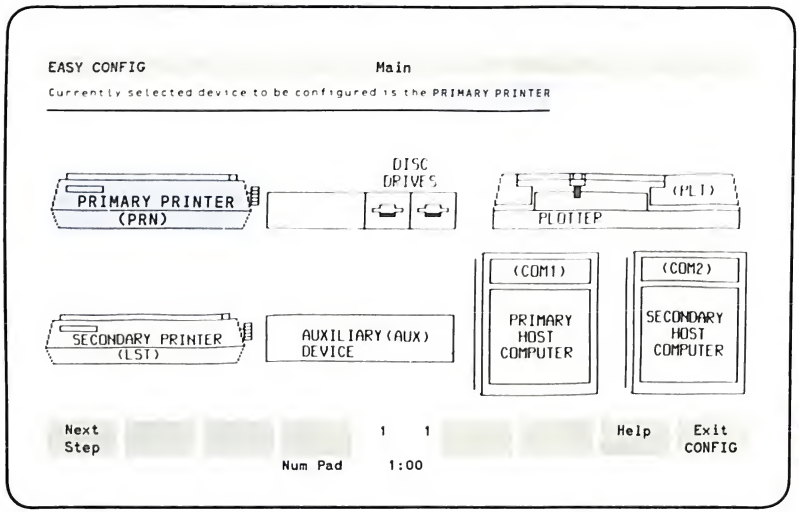

Figure B-2. The EASY CONFIG Main Menu.

Configuring Disc Drives with EASY CONFIG

1. Touch the picture labeled DISC DRIVES, press Tab, or use the cursor control keys until the disc drive picture is highlighted.

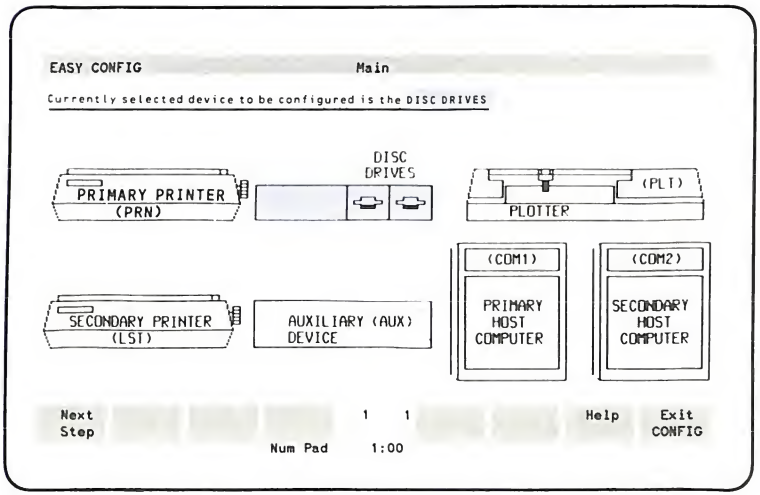

Figure B-3. Choosing Disc Drives on the EASY CONFIG Main Menu

2. Touch `Next Step` or press f1. The EASY CONFIG Disc Drive Choices menu will appear.
3. Use the Tab key, or HP Touch to select the picture on the screen with your disc drive model number. (Don't worry if more than one disc drive is highlighted. In this screen, that's OK.) If the picture that has the same disc drive model number as your drive is already highlighted, proceed to the next step.

Note

If your disc drive is not listed, refer to chapter 11, entitled Configuring Your Touchscreen II, in *Using Your HP Touchscreen II PC.*

---

4. Touch `Main Screen` or press [f8]. Your disc drive is now automatically configured.

If you don't have any printers, plotters or auxiliary devices (a modem for example), turn to the section entitled Exiting EASY CONFIG. If you do, read the next appropriate section.

Configuring Your Primary Printer with EASY CONFIG

1. Touch the picture labeled `PRIMARY PRINTER (PRN)` or press [Tab] until it is highlighted.
2. Touch `Next Step` or press [f1]. The EASY CONFIG Primary Printer Choices screen will appear.
3. Touch the printer picture on the screen that corresponds to your primary printer or press [Tab] until it is highlighted.

   If you don't see your primary printer, select `More Printers` for more choices. You can get back to the first choices you viewed by touching `More Printers` again. If you still don't see your primary printer, select "OTHER".
4. When you've highlighted your primary printer, touch `Next Step` or press [f1].
5. The Printer Connection menu will be displayed on the screen. (If you selected either the HP 2674A Internal Printer or no printer, the EASY CONFIG Main menu will be displayed.)

   a. Look at the back panel of your HP Touchscreen II to see where you connected the printer cable. Touch the corresponding picture on the screen or press [Tab] until it is highlighted.

b. If your primary printer is the HP 2601A or HP 2602A Daisywheel printer, there will be two special function labels on the screen:

   `Previous Wheel` and `Next Wheel`

   Touch these labels (f2 and f3) and watch the "wheel" in the upper right-hand corner of the screen change. These are your print wheel choices. Keep touching until you display the appropriate wheel (for example, USASCII for the standard United States print wheel).

   Go to step c below if your printer is connected with an HP-IB cable. If your printer is connected to an RS-232-C cable, go to step d (skip step c).

c. If you chose the HP-IB connection, EASY CONFIG will automatically inform the computer that your primary printer is address 1. Remember that when you set the switches on your printer according to the instructions in Appendix A (or in More HP Printers and Plotters in *Using Your HP Touchscreen II*) you were setting the address to 1. (If you chose to set the switches differently, you must now use the instructions in the chapter on configuration in *Using Your HP Touchscreen II* to configure your printer correctly. EASY CONFIG is for those who have the standard system.)

d. Touch `Main Screen` or press f8. The EASY CONFIG Main menu will appear and your primary printer is now automatically configured.

Configuring the Rest of Your Devices with EASY CONFIG

Configure your secondary printer, your plotter, your auxiliary device, and your primary and secondary hosts in the same way by touching the appropriate pictures on the EASY CONFIG Main menu. If you are not sure how to perform the necessary steps, touch `Help` or press [f7].

Note

If you are going to be using your plotter with certain graphics programs (like LOTUS), you must configure your plotter both as a plotter and as an auxiliary device.

Exiting EASY CONFIG

1. Return to the EASY CONFIG Main menu.
2. Touch `Exit CONFIG` or press [f8]. The P.A.M. Main menu will appear.

Additional Configuring

You may have to do some additional configuring. Read steps 1 and 2 below and follow the instructions that apply to you.

1. If you do not have any printers, plotters, or auxiliary devices, turn to the section entitled Finishing Configuration on the last page of this appendix.

   OR

2. If you have any type of printer, follow the directions in the next section, Printing from the Keyboard.

Printing From The Keyboard

If you have any type of printer, you need to follow the directions below. This will allow you to print what appears on the display screen by using the keyboard command [Shift] [Print] from certain applications (or when you are using your Touchscreen II as a terminal).

1. Start from the P.A.M. Main menu.

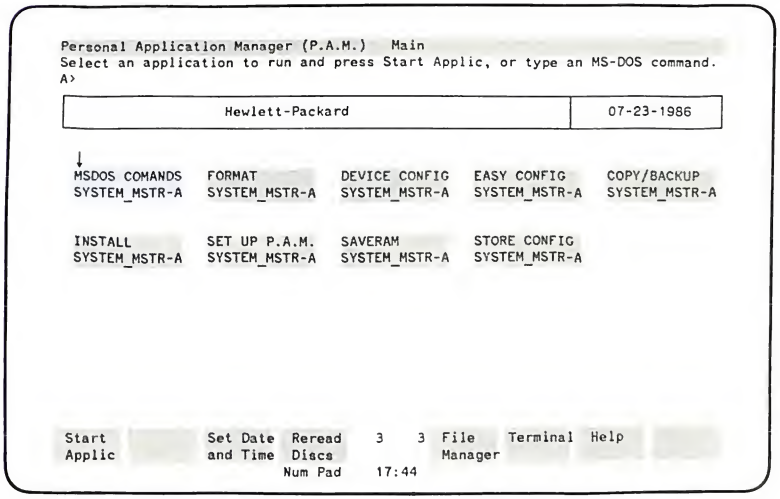

Figure B-4. The P.A.M. Main Menu

2. Touch the `Terminal` function label or press [f6]. The following will appear on the screen after a few seconds:

3. Find the [User System] key on the top row of keys on the keyboard. It is in the middle of the dark gray function keys.
4. Press [User System] until you see the following set of function labels on the screen.

5. Touch `device control` or press [f1]. The following set of function labels will appear at the bottom of the screen.

6. Touch `''to'' devices` or press [f3]. A new set of function labels appear at the bottom of the screen.

7. Look at the function labels on the screen. Do any of them have an asterisk (*)?
   - — If so, touch the function label with the asterisk (*) until the asterisk disappears, or press the corresponding function key.
   - — If not, this is all right. You want to start with no asterisks (*).

   You are concerned with only two of the function labels. You will choose HP-IB or RS-232-C according to the type of printer cable you have connected to your primary printer (the printer that you will use most often). If you choose more than one printer, when you press [Shift] [Print] at the same time from the keyboard, the information on your screen will go to all the selected printers. Choose a or b as follows.

a. Look at the cable hooked up to your printer. If it is an HP-IB cable (pictured in Figure B-5), touch the `HP-IB DEVICE` function label (f5) until the asterisk (*) appears.

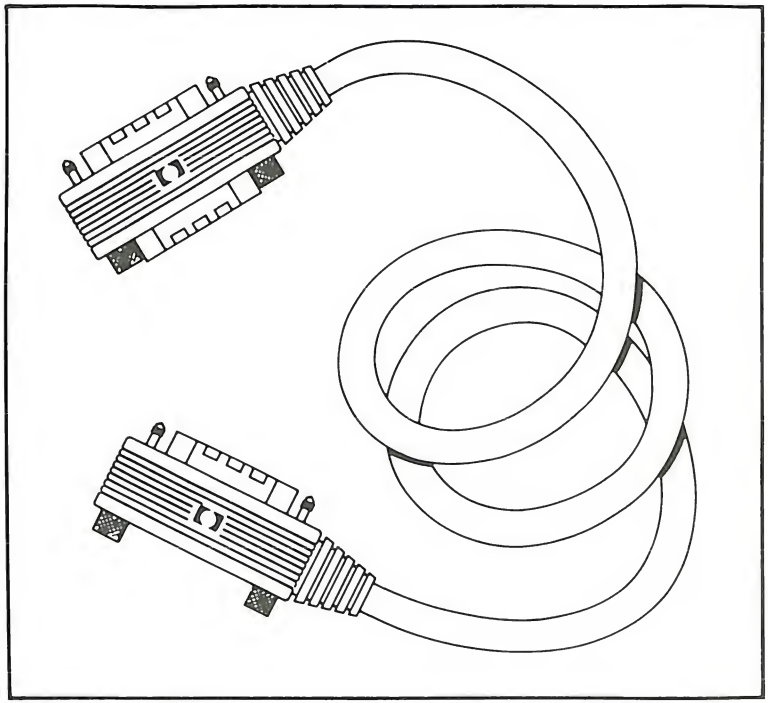

Figure B-5. HP-IB Cable

Note The HP-IB printer you have chosen for your "to" device MUST be set at HP-IB address 1. If you followed the instructions in this manual when you set up your printer, you set the printer at HP-IB address 1. (If the printer's address switches are not set at HP-IB address 1, you cannot configure it as a "to" device.)

b. Look at the cable hooked up to your printer. If it is an RS-232-C cable (pictured in Figure B-6), touch the SERIAL DEVICE function label ([f2]) until the asterisk (*) appears, or press the corresponding function key.

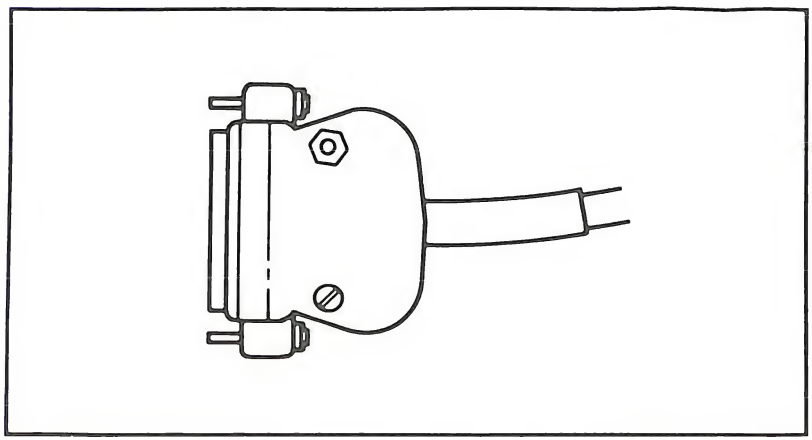

Figure B-6. RS-232-C Cable

8. Hold down [Shift] and press [Stop]. The P.A.M. Main menu will appear.

If you have a printer or plotter connected with an RS-232-C cable, you must follow the instructions in the next section, Configuring Port 2.

If you don't have a printer or plotter connected with an RS-232-C cable, turn to the section titled Finishing Configuration on the last page in this appendix.

Configuring Port 2

Now your computer and operating system know what printers and plotters are connected to your HP Touchscreen II. If you have a peripheral device (printer or plotter) connected with an RS-232-C cable, follow the instructions in this section.

Getting to the Port2 Configuration Menu

1. Start with the P.A.M. Main menu.

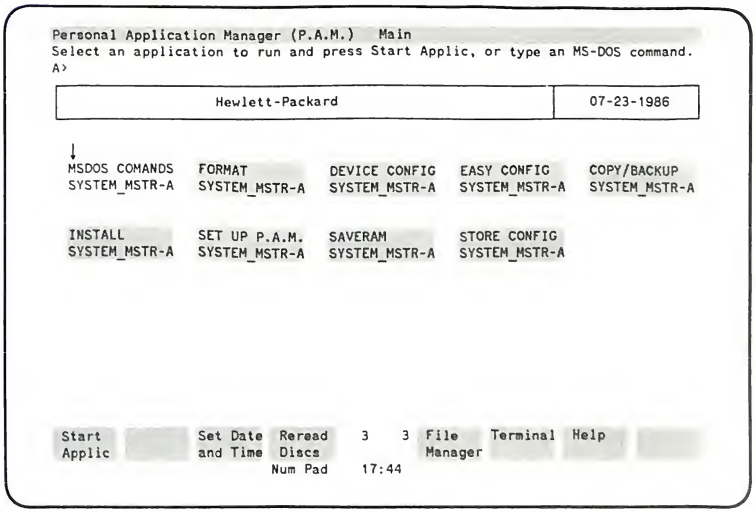

Figure B-7. P.A.M. Main Menu

2. Touch the `Terminal` function label or press [F6].
3. Find the light colored [User System] key on the top row of keys on your keyboard.
4. Press [User System] until the following set of function labels appears on the screen.

device control	margins/ tabs/col	service keys	modes	enhance video	define fields	set time	config keys

5. Touch `config keys` or press [f8]. The following set of function labels will appear.

global config		port 1 config	port 2 config	terminal config	accessory config		

6. Touch `port 2 config` ([f4]). The following display will appear on your screen.

```
                    FULL DUPLEX HARDWIRED    Port 2

BaudRate  2400     Parity   0's    DataBits 7                    Clock  INT
Asterisk  Off                     Stop Bits 1      EnqAck  Yes
  TR(CD) Hi    Check Parity  No      SR(CH) Lo       RTS     Hi

RecvPace   None                    SRRXmit  No   RR(CF)Recv  No
XmitPace   None                  SRRInvert  No   CS(CB)Xmit  No   DM(CC)Xmit  No

 SAVE    NEXT    PREVIOUS  system    3   10          config  DISPLAY  config
 CONFIG  CHOICE  CHOICE    defaults                  menus   FUNCTNS  keys
                           Num Pad     1:00
```

Figure B-8. The Port 2 Configuration Menu

Note Port 2 is usually used to connect peripheral devices such as printers and plotters. Port 1 is usually used to connect your HP Touchscreen II as a terminal to a host computer.

Because there are so many possibilities in this menu, the format in this section will be different from the step-by-step instructions you have seen previously in this manual.

The first section consists of instructions on how to change the values in the Port 2 Configuration menu.

The second section consists of examples of Port 2 Configuration menus for different printers and plotters. You will want your menu to match the appropriate example. To make the changes, use the instructions you will read in the first section.

Changing a Value in the Port 2 Configuration Menu

1. Use the [Tab] key on your keyboard (above the Caps key) to move the blinking cursor to the box you want to change. (The example Port 2 configuration menus have some highlighted boxes. These are the boxes that you need to change.)
2. When you have positioned the cursor, touch `Next Choice` ([f2]) as many times as necessary to get the same value in the box as in the example.
3. Repeat steps 1 and 2 until you have changed all the values that are highlighted in the example. **Do not go on until your screen matches the example screen exactly.**

If You Made a Mistake

- You can keep touching NEXT CHOICE ([f2]) to change the value in one box.

  OR

- If you want to start over from the beginning:

  a. Touch system defaults ([f4]).

  b. Touch DEFAULT VALUES ([f4]).

4. When your Port 2 Configuration looks exactly like that shown in the example, touch SAVE CONFIG ([f1]). (You will automatically be returned to the function labels in Step 4 of the previous section.)
5. Hold down [Shift] and press [Stop]. The P.A.M. Main menu will appear on your display. (You have left terminal mode and have returned to PC mode.)

Examples of Port 2 Configuration Menus

Find the menu below that corresponds to your RS-232-C printer/plotter connected with an RS-232-C cable. Change the values as described above. You will only need to change the values highlighted in the examples. The other values in the examples are already correct on your screen.

- Port 2 Configuration for the HP 2225D (ThinkJet) and HP 2227A (QuietJet Plus) printers:

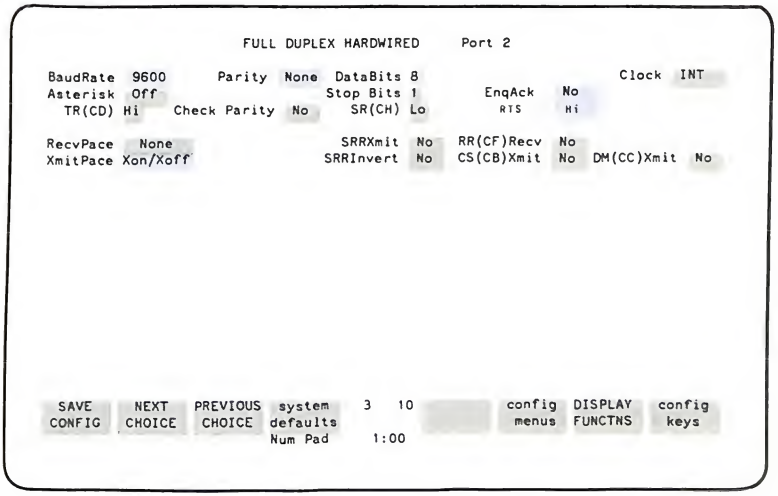

Figure B-9. Port 2 Configuration for the HP 2225D and HP 2227A

- Port 2 Configuration for the HP 2686A (LaserJet) and HP 2686 LaserJet Plus printers:

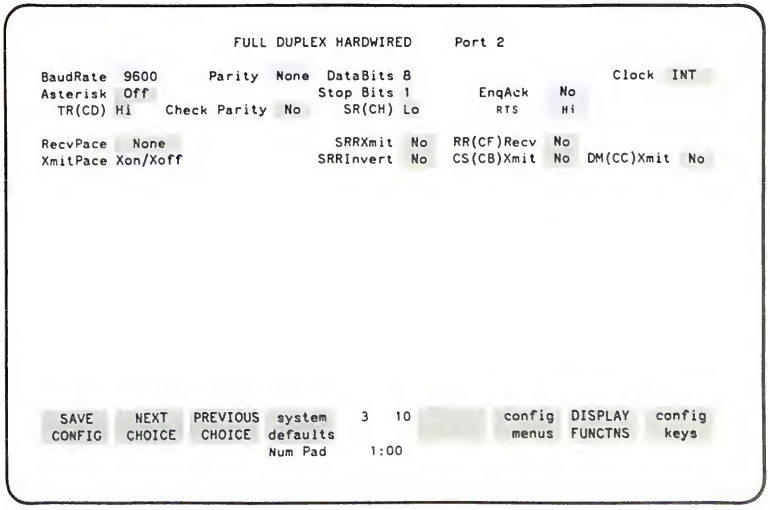

Figure B-10. Port 2 Configuration for the HP 2686A and HP 2686 Plus

- Port 2 Configuration for the HP 7470A and HP 7475A plotters:

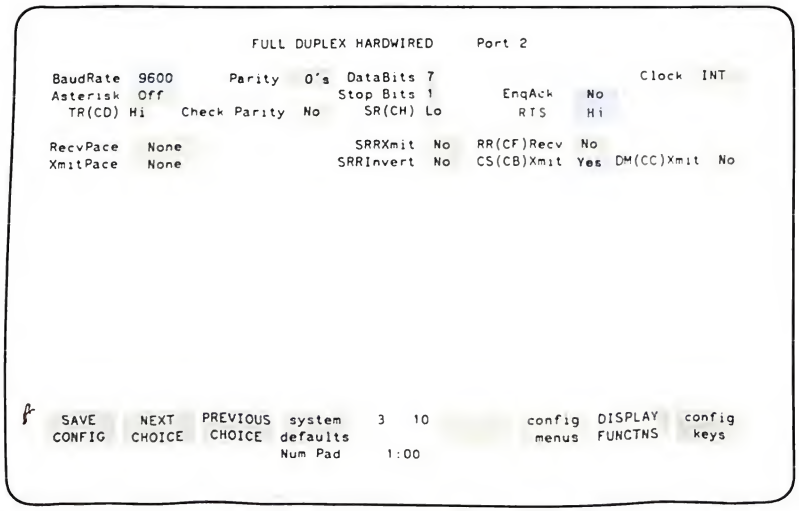

Figure B-11. Port 2 Configuration for the HP 7470A and HP 7475A

- Port 2 Configuration for the HP 2601A and 2602A printers:

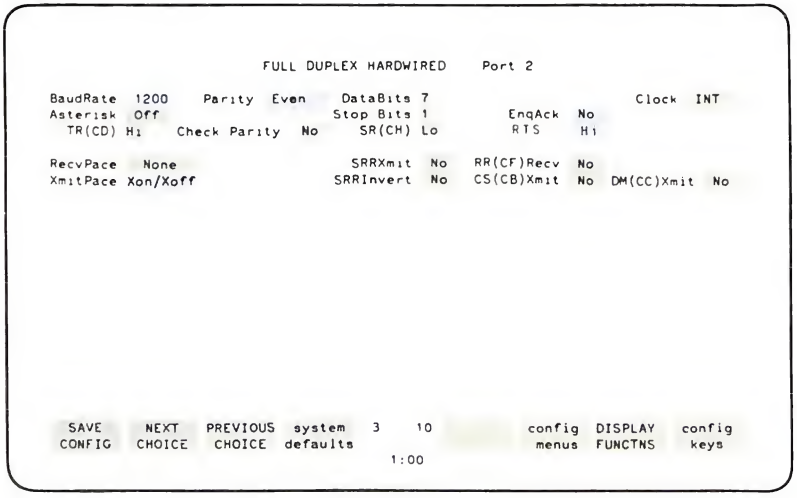

Figure B-12. Port 2 Configuration for the HP 2601A and HP 2602A

■ Port 2 Configuration for the HP 2603A printer:

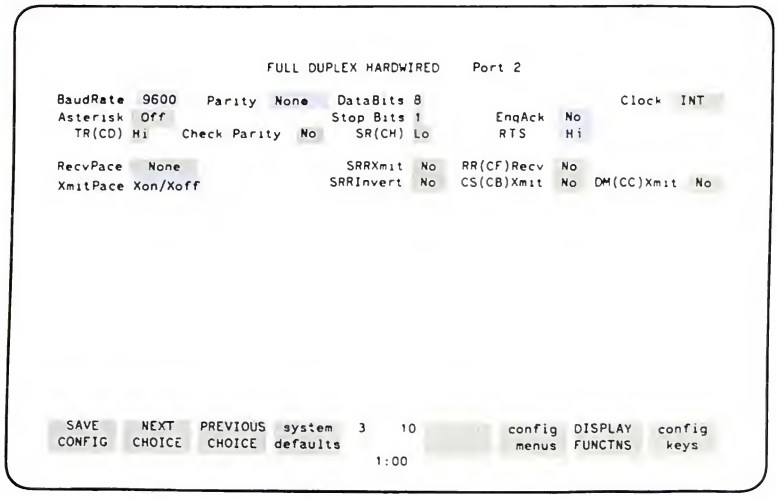

Figure B-13. Port 2 Configuration for the HP 2603A

■ Port 2 Configuration for the HP 2930 Series printer:

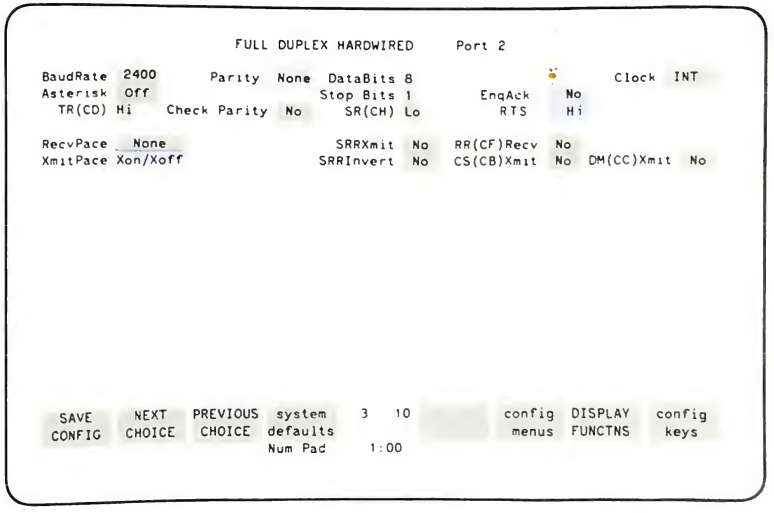

Figure B-14. Port 2 Configuration for the HP 2930 Series

- Port 2 Configuration for the HP 7440A (ColorPro) and HP 7550A plotters:

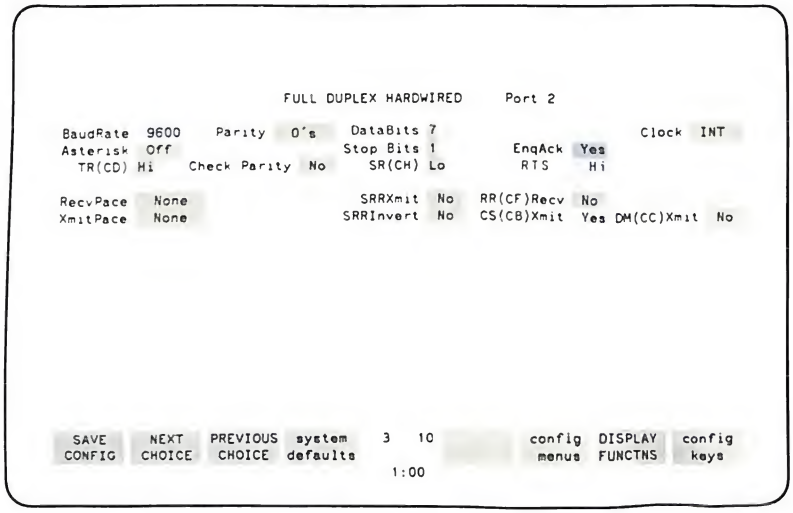

Figure B-15. Port 2 Configuration for the HP 7440A and HP 7550A

Caution Don't forget to follow steps 4 and 5 in the previous subsection. You must save the configuration menu or your printer/plotter will not operate correctly.

Finishing Configuration

Now your system is configured and your PC knows what is connected to it and where it is located. Turn now to the section titled Final Steps in Chapter 4 if you have an HP 9123D or HP 9122B disc drive. Turn to the section titled Renaming Your Disc Drive in Chapter 5 if you have an HP 9133H, HP 9133D, or HP 9153 disc drive.

Appendix C

Providing a Good Environment for Your HP Touchscreen II Personal Computer

C-1 Give the Touchscreen II a Clean Environment
C-1 Keep Your Touchscreen II Away from Fire Hazards
C-2 Provide Moderate Temperature and Humidity
C-4 Provide Safe Electrical Connections
C-5 Protect the Touchscreen II from Lightning
C-6 Avoid Interfering with Radio and Television Reception
C-6 Comply with Local Regulations for Computers

C Providing a Good Environment for Your HP Touchscreen II Personal Computer

This appendix tells you how to set up a good environment for your Touchscreen II so that it will last longer, operate more reliably, and need fewer repairs.

Give the Touchscreen II a Clean Environment

To operate reliably, your computer needs an environment free of contaminants. Keep the area where you have your Touchscreen II free of smoke, ashes, dust, eraser or food crumbs, and aerosol sprays.

Keep Your Touchscreen II Away from Fire Hazards

Do not install or operate your Touchscreen II where there are sources of possible damage. Keep the computer away from open flames, flammable gases, flammable liquids, and combustible dust.

Provide Moderate Temperature and Humidity

The illustration below shows the temperature and humidity requirements of your Touchscreen II:

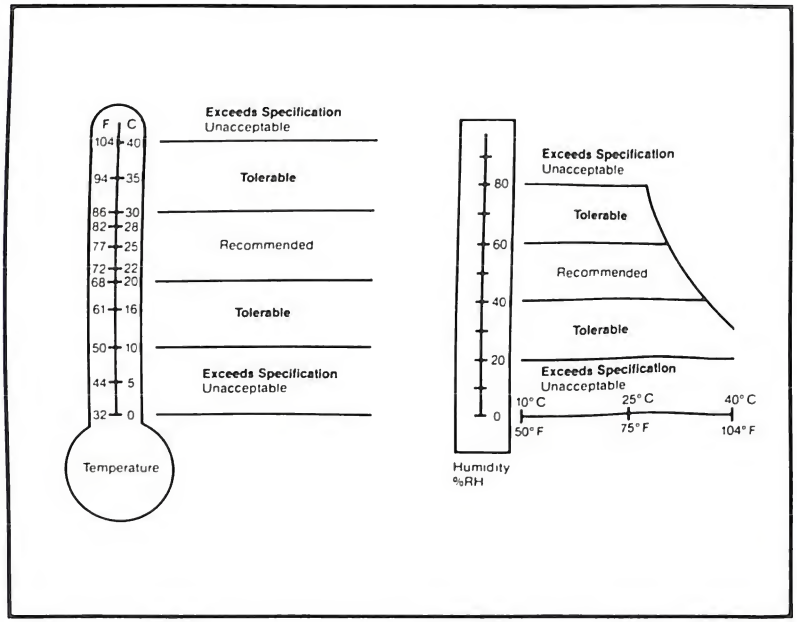

Figure C-1. Recommended Temperature/Humidity Range

Use an inexpensive thermometer and a humidity gauge (available at hardware and department stores) to determine whether the environment meets these requirements.

Temperatures higher than those recommended may cause failures in the Touchscreen II's electronic circuitry.

High humidity can make disc drives fail and cause improper feeding and stacking of printer paper. Low humidity can make static electricity build up, causing excessive wear on flexible discs.

If your building does not meet these recommended temperature and humidity requirements, you should provide air conditioning for your Touchscreen II.

Provide Safe Electrical Connections

- Your Touchscreen II's power cord is approximately 8 feet (2.4 meters) long. Therefore, you should place your Touchscreen II within approximately 8 feet of an electrical outlet
- The power cord for your Touchscreen II must be plugged into a grounded, three-pronged outlet with a controlling circuit breaker.

Caution

DO NOT USE EXTENSION CORDS UNDER ANY CIRCUMSTANCES! Extension cords may create a fire hazard.

You may use a multiple-outlet strip if it meets these requirements.

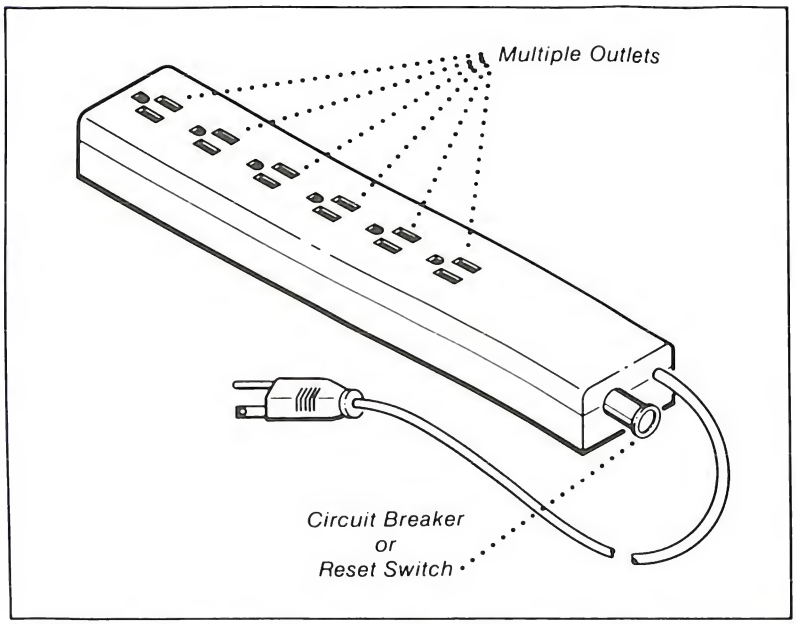

Figure C-2. Multiple-Outlet Strip

You can buy this type of multiple outlet strip from most hardware and department stores.

- **Do not** place connecting cables or power cords under carpeting or across entrance aisles or walkways. Cables or cords placed in these areas are prone to damage, thus increasing the risk of fire or electric shocks.

  All cables and power cords are attached to the back of your equipment. Set up your computer system along walls where electrical outlets are available and cables will be out of the way.

- Give the Touchscreen II its own electrical outlet. Never plug your computer or peripheral equipment (such as printers or plotters) into a wall outlet where you also have the plugs for other electrical equipment (for example, a coffee maker). If you do, electrical interference from the other equipment can make your computer operate abnormally.

  However, you can plug the Touchscreen II and a peripheral device (such as a printer) into the same outlet.

Protect the Touchscreen II from Lightning

If you live in an area that has frequent electrical storms, you may want to install lightning protection for both the computer and the people who use it. In the U.S.A., Article 280 of the National Electrical Code describes how to install lightning arrestors on power and communication lines. The Handbook of the National Fire Protection Association (NFPA) describes principles of lightning protection.

Avoid Interfering with Radio and Television Reception

Your Touchscreen II generates and uses radio-frequency energy, which can interfere with radio and television reception. Installing and using your computer in strict accordance with Hewlett-Packard's instructions minimizes the possibility that it will interfere with radio and television reception. However, Hewlett-Packard cannot guarantee that such interference will not occur.

If you think your computer may be causing interference problems, refer to the chapter, Taking Care of Your Touchscreen II, in *Using Your HP Touchscreen II Personal Computer.*

Comply with Local Regulations for Computers

Some localities have special codes and regulations for computers. You must comply with the requirements of all local laws, regulations, and codes for mechanical, building and electrical distribution systems.

Appendix D

Installing Accessory Boards in the Touchscreen II Personal Computer

D-1 Installation Instructions

D Installing Accessory Boards in the HP Touchscreen II Personal Computer

The following installation instructions, which are tailored to the HP Touchscreen II PC, may differ somewhat from the instructions included with your accessory card. You should follow these instructions in conjunction with those that come with your accessory card; your accessory card may require steps beyond those found here.

Installation Instructions

This is how to install an accessory card in your HP Touchscreen II Personal Computer.

1. Turn the power switch OFF.
2. Remove the top cover of your computer by pressing in the left and right release tabs and lifting.

   Looking into the computer, you will see the accessory card cage on the right. Notice that each of the four expansion slots has its own clip-on cover plate.

3. Remove the clip-on cover plate of the slot you wish to use.

   Accessory cards that do not contain additional memory may be inserted in any slot.

   Additional memory (RAM cards) must be inserted in slot 1, which is the slot closest to the center of the computer. The installation of an accessory card in slot 1 is shown in Figure D-1.

4. Take the accessory card out of the package, taking care to handle the card by the edges only. If the accessory card has a cover plate attached, save the original cover plate and the conductive plastic bag for future use.

5. Holding the edges, align the card with the card guides inside the slot. Slide the accessory card in with the components facing the center of the computer, as shown in Figure D-1. Push the card down so that it is seated securely in the brace on the bottom of the cage.

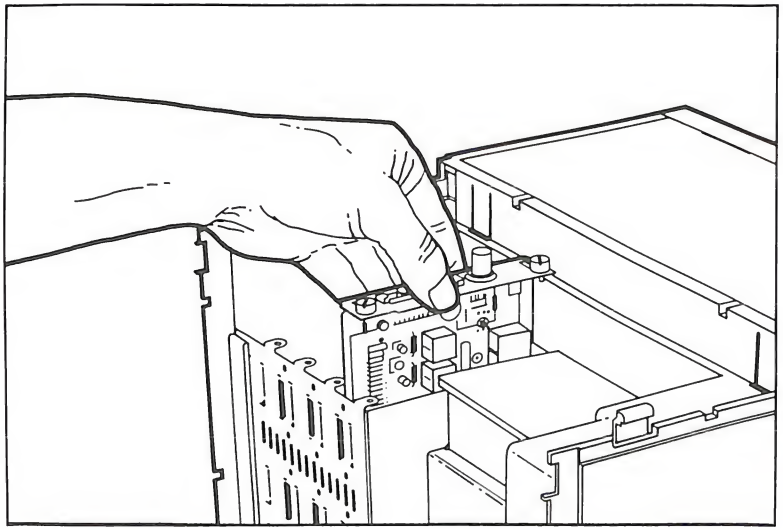

Figure D-1. Installing an Accessory Card

6. Replace the clip-on cover plate. If the accessory card has a cover plate attached, align the screws with the holes provided and tighten. It is important to save the original clip-on cover plate in case the accessory card is removed at a later date.

Caution

Be sure to replace the cover plate over the accessory slot; otherwise, electrical interference with other equipment may occur.

7. Replace the cover on the top of the computer and the installation is complete.

To remove an accessory card:

With the power OFF, remove the top cover of the computer and then remove the cover plate from the slot. Gently slide the card out, put the card into the conductive plastic bag in which it was shipped, and reattach the original cover plate.

Appendix E

Using UPDATE SYSTEM and UPDATE APPS

E-1 Before You Begin
E-2 Using INSTALL to Remove Applications
E-4 Using UPDATE SYSTEM
E-6 Using UPDATE APPS
E-8 Finishing Up

E Using UPDATE SYSTEM and UPDATE APPS

If you have a fixed disc that has been formatted and has files on it that you want to save, follow the instructions in this appendix.

This appendix tells you how to use UPDATE SYSTEM and UPDATE APPS to install the new System Master applications onto your fixed disc from your new System Master Disc.

Before You Begin

Before you use UPDATE SYSTEM and UPDATE APPS, you should know the following:

- UPDATE SYSTEM copies the MS-DOS operating system and commands to your fixed disc.
- UPDATE APPS installs all the System Master applications and copies utilities to your fixed disc.
- Before you do either of the above, however, you will need to remove three applications from your fixed disc, using the INSTALL application located on your new System Master Disc.

Using INSTALL to Remove Applications

If you have the Install, Copy/Backup, and Set Up P.A.M. applications installed on your fixed disc, you must perform the following steps to use UPDATE SYSTEM and UPDATE APPS effectively. (If you do **not** have Install, Copy/Backup, and Set Up P.A.M. installed on your fixed disc, proceed to the next section, entitled Using UPDATE SYSTEM.)

1. Start with your System Master Disc in drive A.
2. Start at the P.A.M. Main menu and highlight the box labeled INSTALL, with SYSTEM_MSTR-A on the line right below it. Be sure that you highlight this box only, and not a box labeled INSTALL but with a second line that ends with a "-B".
3. Touch Start Applic or press f1 to start the INSTALL application.
4. The computer takes a few seconds to load the application. You see this on the screen:

   ```
   Loading INSTALL
   ```

5. You will see the INSTALL Main menu. Touch Remove Applics or press f1, and you will see the Remove Applics REMOVE screen.

6. Highlight the box on the Remove Applics REMOVE screen labeled "B."
7. Touch **Show Applics** or press f5 to display the Remove Applics Select screen.
8. Highlight all of the following applications that appear on your screen:
   - INSTALL
   - SET UP P.A.M.
   - COPY/BACKUP
9. Touch **Start Remove** or press f5 to remove these applications from your fixed disc.

   You will see this on the screen:

   ```
   Removing <Application Filename>
   ```

   Then you will see this:

   ```
   REMOVE completed.
   ```
10. Press **Exit Select** to return to the Remove Applics REMOVE screen; press **Main Menu** to return to the Install Main menu; and then press **Exit Install** to return to the P.A.M. Main menu.

Now you can proceed to Using UPDATE SYSTEM.

Using UPDATE SYSTEM

To use UPDATE SYSTEM to copy the MS-DOS operating system and commands to your fixed disc, perform the following steps:

1. Start with your System Master Disc in drive A.
2. Start at the P.A.M Main menu. Type UPDATSYS A: B:. There must be a space between A: and B:.

Note

If your disc drives are not labeled A: and B:, substitute the appropriate letters in place of A: and B:. In the instructions above, A: is the source drive (it contains the System Master Disc), and B: is the target drive (fixed disc).

Caution

Do not select and touch UPDATE SYSTEM or UPDATE APPS from the P.A.M. Main menu because UPDATE SYS from P.A.M. will try to copy from drive B to drive A. You **must** start the UPDATE SYSTEM and UPDATE APPS applications by typing from the MS-DOS command line in P.A.M.

3. Press Return. The computer takes a few seconds to load the application. You see this on the screen:

```
A>ECHO OFF
*** System will be copied from disc "A:" to disc
"B:".
*** If this is NOT correct, hold down [CTRL] and
press "C".
*** If this IS correct, press any alphanumeric
key to continue.
Strike a key when ready...
```

4. If you are ready to continue, press Return.

   If you do not wish to continue, hold down the CTRL key and press the C key, and the P.A.M Main menu will reappear.

5. When you press a key to continue the UPDATE SYSTEM process, UPDATE SYSTEM proceeds to copy the operating system and commands from the System Master Disc to the fixed disc. The UPDATE SYSTEM procedure takes approximately two minutes to complete.

   When UPDATE SYSTEM is complete, you will see this message:

```
*** System Transferred
*** Your system will now reboot from drive A:.
*** When the P.A.M. Main menu or the MS-DOS
system prompt appears, run UPDATE APPS.
*** Strike a key when ready . . .
```

6. Press Return. The fixed disc now has the MS-DOS operating system and commands from the System Master Disc.
7. Proceed now to Using UPDATE APPS.

Using UPDATE APPS

The following is a list of the System Master Applications that UPDATE APPS installs:

- MS-DOS COMMANDS
- FORMAT
- DEVICE CONFIG
- EASY CONFIG
- COPY/BACKUP
- INSTALL
- SET UP P.A.M.
- SAVERAM
- STORE CONFIG

To use UPDATE APPS to install all the System Master Applications to your fixed disc, perform the following steps:

1. Start with your System Master Disc in drive A:.
2. Start at the P.A.M. Main menu. Type UPDATAPS A: B:. There must be a space between A: and B:.

Note If your disc drives are not labeled A: and B:, substitute the appropriate letters in place of A: and B:. In the instructions above, A: is the source drive (it contains the System Master Disc), and B: is the target drive (fixed disc).

---

3. Press Return. The computer takes a few seconds to load the application. You see this on the screen:

```
A>ECHO OFF
*** Installation will be from disc "A:" to disc
"B:".
*** If this is NOT correct, hold down [CTRL] and
press "C".
*** If this IS correct, press any alphanumeric
key to continue.
Strike a key when ready...
```

4. If you are ready to continue, press Return.

   If you do not wish to continue, hold down the CTRL key and press the C key, and the P.A.M. Main menu will reappear.

5. When you press a key to continue the UPDATE APPS process, the application proceeds to install the System Master Applications onto your fixed disc. The UPDATE APPS procedure takes approximately six minutes.

What You see on the Screen

During the UPDATE APPS process, you see the names of the files that are being installed in each application. You see the names and version numbers of the applications being installed and the amount of space remaining on the fixed disc throughout the procedure.

Finishing Up

When UPDATE APPS is complete, the P.A.M. Main menu reappears. The fixed disc now has all the files it needs from the new System Master Disc. You can now start your system from the fixed disc. Remove your System Master Disc from drive A and put it in a safe place.

Now, proceed to Changing the Address of Your Fixed Disc Drive, located in Chapter 5, Connecting the HP 9133H Fixed Disc Drive, and follow the instructions, so you will be able to start your system from the fixed disc.

Reader Comment Card

Getting Started with Your HP Touchscreen II Personal Computer (45847-90044)

We welcome your evaluation of this manual. Your comments and suggestions will help us improve our publications. Please use and attach additional pages if necessary.

Please circle the following Yes or No:

Is this manual well organized?	Yes	No
Is the information technically accurate?	Yes	No
Are instructions complete?	Yes	No
Are concepts and wording easy to understand?	Yes	No
Are examples and pictures helpful?	Yes	No
Are there enough examples and pictures?	Yes	No

Comments: _____

_____

_____

_____

_____

_____

Name: _____

Title: _____

Company: _____

Address: _____

City: _____

State: _____ Zip Code: _____

Country: _____

Please tear out and mail in.

HEWLETT PACKARD

Printed in Singapore 9/86

NO POSTAGE
NECESSARY
IF MAILED
IN THE
UNITED STATES

BUSINESS REPLY MAIL
FIRST CLASS PERMIT NO. 1626 SANTA CLARA, CA

POSTAGE WILL BE PAID BY ADDRESSEE

Hewlett-Packard Company
Personal Office Computer Division
P.O. Box 486
974 E. Arques Avenue
Sunnyvale, CA 94086 USA

ATTN: Documentation Department

Fold here

Tape Please do not staple. Tape

Disc Drive Labels

A	A	A	A
A	A	A	A
B	B	B	B
B	B	B	B
C	C	D	D
E	E	F	F
G	G	H	H
I	I	J	J

formation.

Port
—
—
—
—
Circle 1 or 2
Circle 1 or 2
Circle 1 or 2
Circle 1 or 2
Circle 1 or 2
—
Circle 1 or 2
—
Circle 1 or 2
Port 1

NO POSTAGE
NECESSARY
IF MAILED
IN THE
UNITED STATES

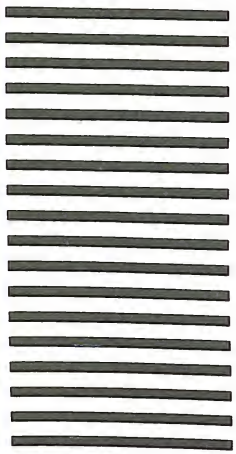

Tape

Your HP Touchscreen II's Vital Statistics

	Circle the number of the equipment being used.		Circle option being used or fill in information.			
	#	Equipment	Power Cord	Data Cable	Address Setting	Port
Display	1	Display Unit/Computer	Provided with Device	—	—	—
Disc Drives	2	Flexible Disc Drive—HP9123D	Interconnect Power Cord	HP-IB	—	—
	3	Fixed Disc Drive—HP9133H	Provided with Device	HP-IB	**Fill in:**	—
	4	Other				
Printers	5A	Think Jet—Thermal Ink Jet Printer HP2225A	Provided with Device	HP-IB	**Fill in:**	—
	5B	Think Jet—Thermal Ink Jet Printer HP2225D	Provided with Device	RS-232-C	—	**Circle** 1 or 2
	6	2227A QuietJet Plus Printer	Provided with Device	RS-232-C	Fill in:	**Circle** 1 or 2
	7	2603A Daisywheel Printer	Provided with Device	RS-232-C	Fill in:	**Circle** 1 or 2
	8	Laser Jet Printer HP2686A	Provided with Device	RS-232-C		**Circle** 1 or 2
	9	2686 LaserJet Plus Printer	Provided with Device	RS-232-C	—	**Circle** 1 or 2
Plotters	10A	Plotter—HP 7440A	Provided with Device	HP-IB	**Fill in:**	—
	10B	Plotter—HP 7440A	Provided with Device	RS-232-C	—	**Circle** 1 or 2
	11	Plotter—HP 7475A	Provided with Device	HP-IB	**Fill in:**	—
	12	Plotter—HP 7475A	Provided with Device	RS-232-C	—	**Circle** 1 or 2
Terminal	13	Hardwire to another computer	—	RS-232-C	—	Port 1
	14	External Modem				
Other	15	Other				
	16	Other				

Basic Flow of Tasks

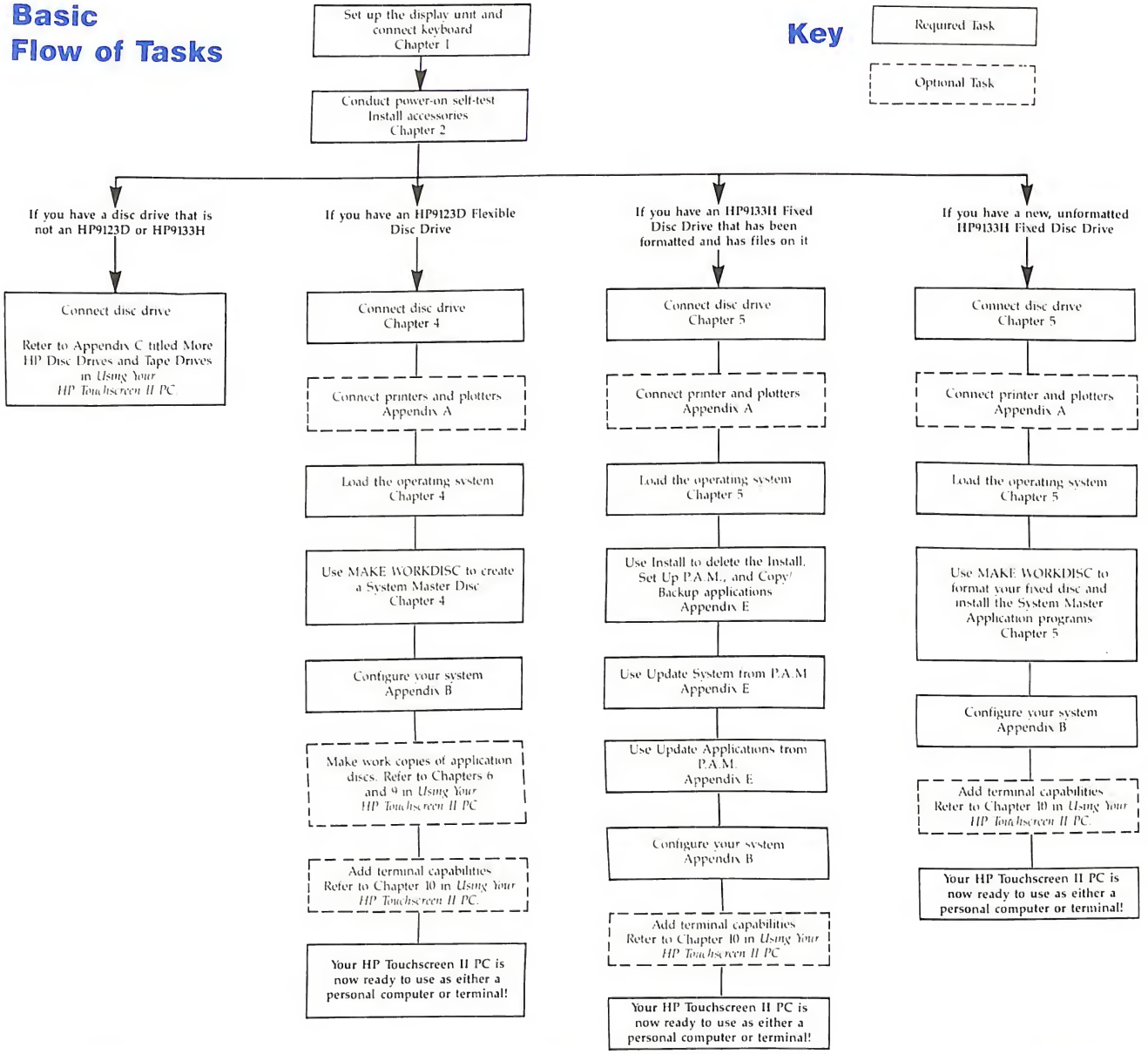

Printed in Singapore 9/86
45847-90044